Product data sheet

Specifications

Green Premium™

Rope pull switch with wireless and batteryless transmitter, Harmony XB5R, plastic black

ZBRP1

Product availability: Non-Stock - Not normally stocked in distribution facility

Price*: 180.00 USD

Main

Range Of Product	Harmony XB5R
Product Or Component Type	Wireless and batteryless transmitter
Device Short Name	ZBRP1
Bezel Material	Plastic
Transmission Frequency	2405 MHz
Emission Class	5M00G7W
Antenna Type	Omnidirectional

Complementary

Number Of Channels	1
Antenna Gain	0 dBi
Cad Overall Height	5.67 in (144 mm)
Cad Overall Width	2.20 in (56 mm)
Cad Overall Depth	1.50 in (38 mm)
Net Weight	0.33 lb(US) (0.15 kg)
Mechanical Robustness	Free fall resistance 1 m EN/IEC 60068-2-31
Standards	UL 508 EN/IEC 60947-1 EN/IEC 62479 EN/IEC 60947-5-1 EN/IEC 300328
Radio Agreement	ICASA GITEKI
Communication Port Protocol	Zigbee green power 2.4 GHz IEEE 802.15.4
Maximum Sensing Distance	328.08 ft (100 m) in free field
Emission Power	3 mW
Fixing Mode	By screw 15.93…19.47 lbf.in (1.8…2.2 N.m)
Mounting Mode	Between 2 ropes Panel mount with universal support
Operating Position	Any position

Environment

Ambient Air Temperature For Storage	-40…158 °F (-40…70 °C)

Price is “List Price” and may be subject to a trade discount – check with your local distributor or retailer for actual price.

Disclaimer: This documentation is not intended as a substitute for and is not to be used for determining suitability or reliability of these products for specific user applications

Ambient Air Temperature For Operation	-13…158 °F (-25…70 °C)
Relative Humidity	95 % without condensation
Ip Degree Of Protection	IP65 IEC 62262
Nema Degree Of Protection	NEMA 4
Ik Degree Of Protection	IK05 conforming to IEC 62262
Mechanical Durability	1000000 cycles
Electromagnetic Compatibility	Electrostatic discharge immunity test - test level: 8 kV (in free air (in insulating parts)) Susceptibility to electromagnetic fields - test level: 10 V/m (80...2000 MHz) Susceptibility to electromagnetic fields - test level: 6 V/m (2000...6000 MHz)
Product Certifications	UL GOST CE RCM ANATEL FCC UKCA

Ordering and shipping details

Category	US1000I22470
Discount Schedule	000I
Gtin	3606480571732
Returnability	No
Country Of Origin	FR

Packing Units

Unit Type Of Package 1	PCE
Number Of Units In Package 1	1
Package 1 Height	2.64 in (6.700 cm)
Package 1 Width	2.56 in (6.500 cm)
Package 1 Length	6.50 in (16.500 cm)
Package 1 Weight	6.07 oz (172.000 g)
Unit Type Of Package 2	S03
Number Of Units In Package 2	32
Package 2 Height	11.81 in (30.000 cm)
Package 2 Width	11.81 in (30.000 cm)
Package 2 Length	15.75 in (40.000 cm)
Package 2 Weight	13.80 lb(US) (6.259 kg)

Contractual warranty

Warranty	18 months

Sustainability

Green Premium™ label is Schneider Electric's commitment to delivering products with best-in-class environmental performance. Green Premium promises compliance with the latest regulations, transparency on environmental impacts, as well as circular and low-CO_2 products.

Guide to assessing product sustainability is a white paper that clarifies global eco-label standards and how to interpret environmental declarations.

Learn more about Green Premium >

Guide to assess a product's sustainability >

Transparency RoHS/REACh

Well-being performance

Mercury Free

Rohs Exemption Information	Yes

Certifications & Standards

Reach Regulation	REACh Declaration
Eu Rohs Directive	Pro-active compliance (Product out of EU RoHS legal scope)
China Rohs Regulation	China RoHS declaration
Environmental Disclosure	Product Environmental Profile
Weee	The product must be disposed on European Union markets following specific waste collection and never end up in rubbish bins.
Circularity Profile	End of Life Information
California Proposition 65	WARNING: This product can expose you to chemicals including: Nickel compounds, which is known to the State of California to cause cancer, and Di-isodecyl phthalate (DIDP), which is known to the State of California to cause birth defects or other reproductive harm. For more information go to www.P65Warnings.ca.gov

Dimensions Drawings

Wireless and Batteryless Rope Pull Switch Transmitter

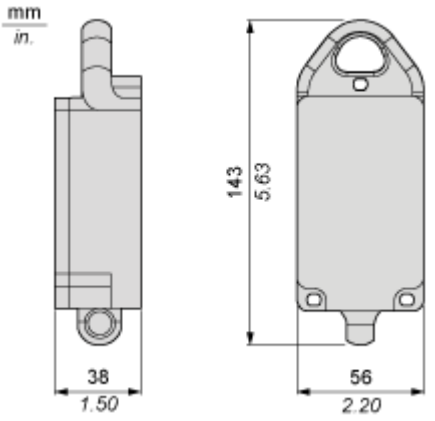

Mounting and Clearance

Transmitter Mounting

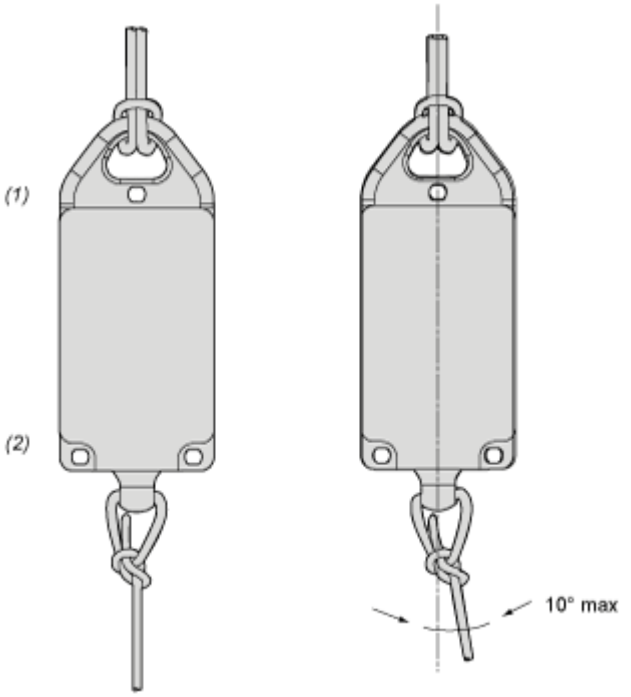

(1) HIGH

(2) BOTTOM

Transmitter Mounting on Flat Surface

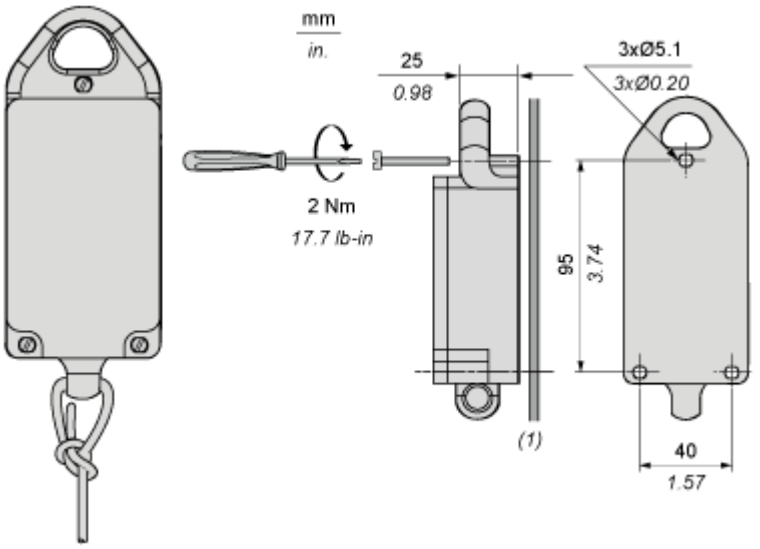

(1) Installation on flat surface