Product data sheet

Specifications

Empty handy box for mobile use, Harmony XB5R, plastic, green, 2 cut outs

ZBRM22

Product availability: Stock - Normally stocked in distribution facility

Price*: 64.00 USD

Main

Range Of Product	Harmony XB5R
Product Or Component Type	Empty handy box
Device Short Name	ZBRM
Product Destination	For XB5R Ø 22 mm control units
Control Station Application	Two functions

Complementary

Colour Of Base Of Enclosure	Green Pantone 355C)
Colour Of Cover	Dark grey RAL 7016)
Material	Polycarbonate
Net Weight	0.24 lb(US) (0.11 kg)

Environment

Ambient Air Temperature For Storage	-40…158 °F (-40…70 °C)
Ambient Air Temperature For Operation	-13…131 °F (-25…55 °C)
Ip Degree Of Protection	IP65 IEC 60529
Ik Degree Of Protection	IK03 conforming to EN 50102
Standards	ETSI EN 301 489-3 ETSI EN 301 489-1 ETSI EN 300 440-2 UL 508 CSA C22.2 No 14 ETSI EN 300 440-1 EN/IEC 60947-5-1
Product Certifications	FCC C-tick CE ANATEL SRRC BT 2006/95/EC GOST RSS
Directives	1999/5/EC - R&TTE directive 2004/108/EC - electromagnetic compatibility

Ordering and shipping details

Category	US1000I22470

Price is “List Price” and may be subject to a trade discount – check with your local distributor or retailer for actual price.

Disclaimer: This documentation is not intended as a substitute for and is not to be used for determining suitability or reliability of these products for specific user applications

Discount Schedule	000I
Gtin	3606480673542
Returnability	Yes
Country Of Origin	HU

Packing Units

Unit Type Of Package 1	PCE
Number Of Units In Package 1	1
Package 1 Height	2.52 in (6.4 cm)
Package 1 Width	2.68 in (6.8 cm)
Package 1 Length	6.61 in (16.8 cm)
Package 1 Weight	5.04 oz (143 g)
Unit Type Of Package 2	S03
Number Of Units In Package 2	32
Package 2 Height	11.81 in (30 cm)
Package 2 Width	11.81 in (30 cm)
Package 2 Length	15.75 in (40 cm)
Package 2 Weight	11.26 lb(US) (5.106 kg)
Unit Type Of Package 3	P06
Number Of Units In Package 3	256
Package 3 Height	29.53 in (75 cm)
Package 3 Width	23.62 in (60 cm)
Package 3 Length	31.50 in (80 cm)
Package 3 Weight	104.59 lb(US) (47.44 kg)

Sustainability

Green Premium™ label is Schneider Electric's commitment to delivering products with best-in-class environmental performance. Green Premium promises compliance with the latest regulations, transparency on environmental impacts, as well as circular and low-CO_2 products.

Guide to assessing product sustainability is a white paper that clarifies global eco-label standards and how to interpret environmental declarations.

Learn more about Green Premium >

Guide to assess a product's sustainability >

Transparency RoHS/REACh

Well-being performance

Mercury Free

Rohs Exemption Information Yes

Certifications & Standards

Reach Regulation	REACh Declaration
Eu Rohs Directive	Pro-active compliance (Product out of EU RoHS legal scope)
China Rohs Regulation	China RoHS declaration
Environmental Disclosure	Product Environmental Profile
Circularity Profile	End of Life Information
California Proposition 65	WARNING: This product can expose you to chemicals including: Nickel compounds, which is known to the State of California to cause cancer, and Di-isodecyl phthalate (DIDP), which is known to the State of California to cause birth defects or other reproductive harm. For more information go to www.P65Warnings.ca.gov

Dimensions Drawings

Dimensions

Wireless and Batteryless Pushbutton
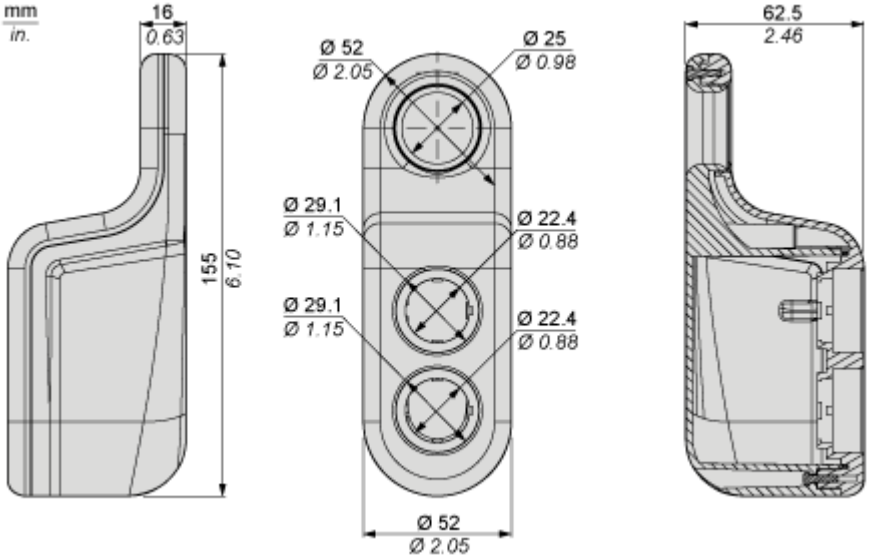
Plastic Mobile Box for Mobile or Fix Use - 2 Functions