Product data sheet

Specifications

Green Premium™

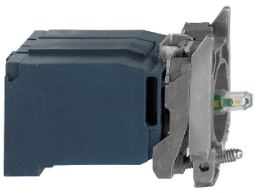

Complete body/light block assembly, Harmony XB4, blue light with body/fixing collar with BA9s LED bulb 220...240 V

ZB4BV4D6

Discontinued

Discontinued on: Dec 2, 2020

End-of-service on: Dec 31, 2020

Main

Range Of Product	Harmony XB4
Product Or Component Type	Complete body/light block assembly
Device Short Name	ZB4
Fixing Collar Material	Zamak
Sale Per Indivisible Quantity	1
Connections - Terminals	Screw clamp terminals, <= 2 x 1.5 mm² with cable end
Light Source	LED
Bulb Base	BA 9s
Light Block Supply	Via integral transformer 1.2 VA 6 V
Light Source Colour	Blue
[Us] Rated Supply Voltage	230...240 V AC 50/60 Hz

Complementary

Cad Overall Width	1.18 in (30 mm)
Cad Overall Height	1.85 in (47 mm)
Cad Overall Depth	2.36 in (60 mm)
Terminals Description Iso N°1	(X1-X2)PL
Net Weight	0.30 lb(US) (0.134 kg)
Tightening Torque	7.08…10.62 lbf.in (0.8…1.2 N.m) EN 60947-1
Shape Of Screw Head	Cross Philips no 1
[Ui] Rated Insulation Voltage	600 V 3)EN 60947-1
[Uimp] Rated Impulse Withstand Voltage	6 kV EN 60947-1
Signalling Type	Steady
Mounting Of Block	Front mounting
Electrical Composition Code	P4

Environment

Protective Treatment	TH
Ambient Air Temperature For Storage	-40…158 °F (-40…70 °C)

Price is “List Price” and may be subject to a trade discount – check with your local distributor or retailer for actual price.

Disclaimer: This documentation is not intended as a substitute for and is not to be used for determining suitability or reliability of these products for specific user applications

Ambient Air Temperature For Operation	-40…158 °F (-40…70 °C)
Electrical Shock Protection Class	Class I IEC 60536
Ip Degree Of Protection	IP20
Standards	EN/IEC 60947-5-1 EN/IEC 60947-1 EN/IEC 60947-5-4 UL 508 CSA C22.2 No 14 JIS C8201-5-1 EN/IEC 60947-5-5 JIS C8201-1
Product Certifications	LROS (Lloyds register of shipping) CSA BV UL Listed DNV GL
Vibration Resistance	5 gn 2…500 Hz)IEC 60068-2-6
Shock Resistance	30 gn 18 ms) half sine wave acceleration IEC 60068-2-27

Ordering and shipping details

Gtin	3389110287202

Contractual warranty

Warranty	18 months

Sustainability

Green Premium™ label is Schneider Electric's commitment to delivering products with best-in-class environmental performance. Green Premium promises compliance with the latest regulations, transparency on environmental impacts, as well as circular and low-CO_2 products.

Guide to assessing product sustainability is a white paper that clarifies global eco-label standards and how to interpret environmental declarations.

Learn more about Green Premium >

Guide to assess a product's sustainability >

Transparency RoHS/REACh

Well-being performance

Mercury Free

Rohs Exemption Information	Yes

Certifications & Standards

Reach Regulation	REACh Declaration
Eu Rohs Directive	Pro-active compliance (Product out of EU RoHS legal scope)
China Rohs Regulation	China RoHS declaration
Environmental Disclosure	Product Environmental Profile
Weee	The product must be disposed on European Union markets following specific waste collection and never end up in rubbish bins.
Circularity Profile	End of Life Information
California Proposition 65	WARNING: This product can expose you to chemicals including: Lead and lead compounds, which is known to the State of California to cause cancer and birth defects or other reproductive harm. For more information go to www.P65Warnings.ca.gov

Dimensions Drawings

Dimensions

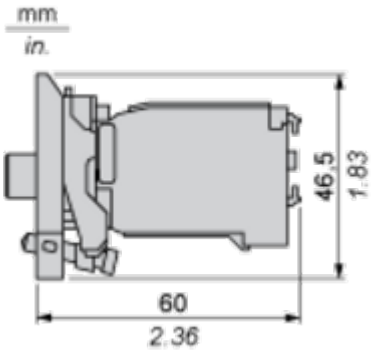

Mounting and Clearance

Panel Cut-out for Pushbuttons, Switches and Pilot Lights (Finished Holes, Ready for Installation)

Connection by Screw Clamp Terminals or Plug-in Connectors or on Printed Circuit Board	Connection by Faston Connectors
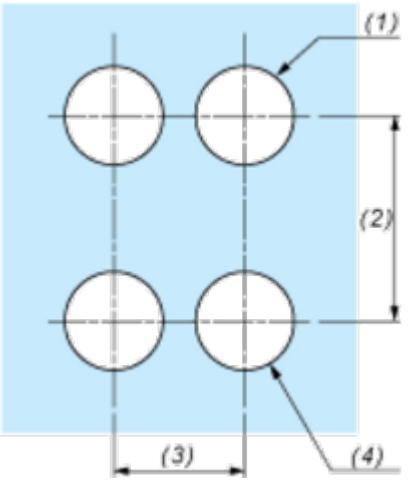	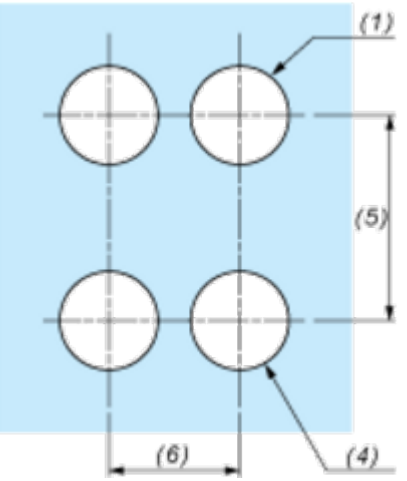

(1) Diameter on finished panel or support
(2) 40 mm min. / 1.57 in. min.
(3) 30 mm min. / 1.18 in. min.
(4) Ø 22.5 mm / 0.89 in. recommended (Ø 22.3 mm $_{0}^{+0.4}$ / 0.88 in. $_{0}^{+0.016}$)
(5) 45 mm min. / 1.78 in. min.
(6) 32 mm min. / 1.26 in. min.