# Product data sheet

Specifications

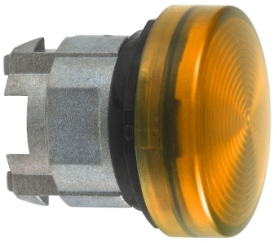

## Head for pilot light, Harmony XB4, orange Ø22 mm with grooved lens BA9s bulb

ZB4BV05S

**Product availability: Non-Stock - Not normally stocked in distribution facility**

**Price*: 11.40 USD**

## Main

| | |
|---|---|
| **Range Of Product** | Harmony XB4 |
| **Product Or Component Type** | Head for pilot light |
| **Product Compatibility** | BA 9s |
| **Device Short Name** | ZB4 |
| **Bezel Material** | Chromium plated metal |
| **Mounting Diameter** | 0.87 in (22 mm) |
| **Sale Per Indivisible Quantity** | 1 |
| **Head Type** | Standard |
| **Shape Of Signaling Unit Head** | Round |
| **Cap/Operator Or Lens Colour** | Orange |
| **Operator Additional Information** | With grooved lens |
| **Environmental Characteristic** | High ambient lighting environment |

## Complementary

| | |
|---|---|
| **Cad Overall Width** | 1.14 in (29 mm) |
| **Cad Overall Height** | 1.14 in (29 mm) |
| **Cad Overall Depth** | 1.18 in (30 mm) |
| **Net Weight** | 0.06 lb(US) (0.027 kg) |
| **Resistance To High Pressure Washer** | 1015.26 psi (7000000 Pa) 131 °F (55 °C) 0.1 m |
| **Electrical Composition Code** | P3 front mounting BA 9s<br>P4 front mounting BA 9s and transformer |
| **Device Presentation** | Basic element |

## Environment

| | |
|---|---|
| **Protective Treatment** | TH |
| **Ambient Air Temperature For Storage** | -40…158 °F (-40…70 °C) |
| **Ambient Air Temperature For Operation** | -40…131 °F (-40…55 °C) |
| **Overvoltage Category** | Class I IEC 60536 |
| **Ip Degree Of Protection** | IP66 IEC 60529<br>IP67<br>IP69<br>IP69K |

Price is “List Price” and may be subject to a trade discount – check with your local distributor or retailer for actual price.

Disclaimer: This documentation is not intended as a substitute for and is not to be used for determining suitability or reliability of these products for specific user applications

| | |
|---|---|
| **Nema Degree Of Protection** | NEMA 13<br>NEMA 4X |
| **Ik Degree Of Protection** | IK06 conforming to IEC 50102 |
| **Standards** | UL 508<br>EN/IEC 60947-5-4<br>EN/IEC 60947-1<br>EN/IEC 60947-5-1<br>EN/IEC 60947-5-5<br>JIS C8201-5-1<br>CSA C22.2 No 14<br>JIS C8201-1 |
| **Vibration Resistance** | 5 gn 2…500 Hz)IEC 60068-2-6 |
| **Shock Resistance** | 30 gn 18 ms) half sine wave acceleration IEC 60068-2-27<br>50 gn 11 ms) half sine wave acceleration IEC 60068-2-27 |

## Ordering and shipping details

| | |
|---|---|
| **Category** | US10CS222468 |
| **Discount Schedule** | 0CS2 |
| **Gtin** | 3389110072136 |
| **Returnability** | No |
| **Country Of Origin** | FR |

## Packing Units

| | |
|---|---|
| **Unit Type Of Package 1** | PCE |
| **Number Of Units In Package 1** | 1 |
| **Package 1 Height** | 2.13 in (5.4 cm) |
| **Package 1 Width** | 1.34 in (3.4 cm) |
| **Package 1 Length** | 1.73 in (4.4 cm) |
| **Package 1 Weight** | 0.81 oz (23.0 g) |

## Contractual warranty

| | |
|---|---|
| **Warranty** | 18 months |

## Sustainability

**Green Premium™ label** is Schneider Electric's commitment to delivering products with best-in-class environmental performance. Green Premium promises compliance with the latest regulations, transparency on environmental impacts, as well as circular and low-$CO_2$ products.

**Guide to assessing product sustainability** is a white paper that clarifies global eco-label standards and how to interpret environmental declarations.

Learn more about Green Premium >

Guide to assess a product's sustainability >

Transparency RoHS/REACh

## Well-being performance

| | |
|---|---|
| Reach Free Of Svhc | |
| Toxic Heavy Metal Free | |
| Mercury Free | |
| Rohs Exemption Information | Yes |

## Certifications & Standards

| | |
|---|---|
| **Reach Regulation** | REACh Declaration |
| **Eu Rohs Directive** | Pro-active compliance (Product out of EU RoHS legal scope)<br>EU RoHS Declaration |
| **China Rohs Regulation** | China RoHS declaration |
| **Environmental Disclosure** | Product Environmental Profile |
| **Circularity Profile** | End of Life Information |

Dimensions Drawings

## Dimensions

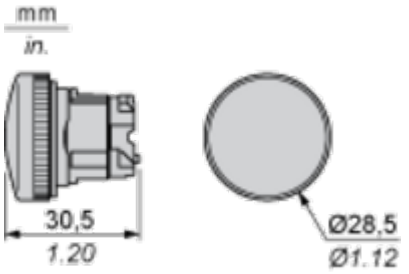

## Mounting and Clearance

### Panel Cut-out for Pushbuttons, Switches and Pilot Lights (Finished Holes, Ready for Installation)

| Connection by Screw Clamp Terminals or Plug-in Connectors or on Printed Circuit Board | Connection by Faston Connectors |
|---|---|
| 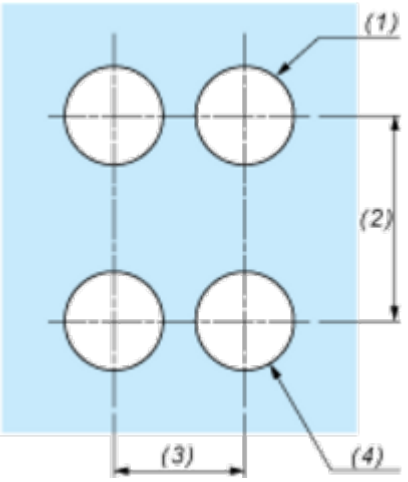  | 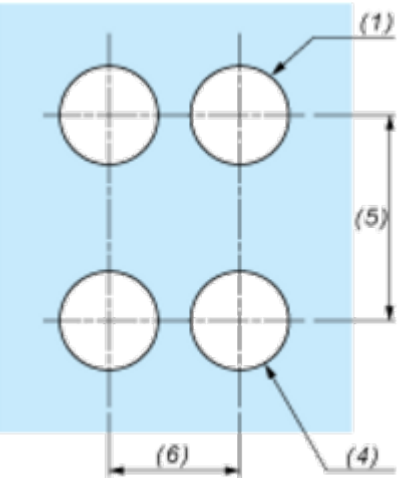  |

**(1)** Diameter on finished panel or support
**(2)** 40 mm min. / 1.57 in. min.
**(3)** 30 mm min. / 1.18 in. min.
**(4)** Ø 22.5 mm / 0.89 in. recommended (Ø 22.3 mm $_{0}^{+0.4}$ / 0.88 in. $_{0}^{+0.016}$)
**(5)** 45 mm min. / 1.78 in. min.
**(6)** 32 mm min. / 1.26 in. min.

## Pushbuttons, Switches and Pilot Lights for Printed Circuit Board Connection

### Panel Cut-outs (Viewed from Installer's Side)

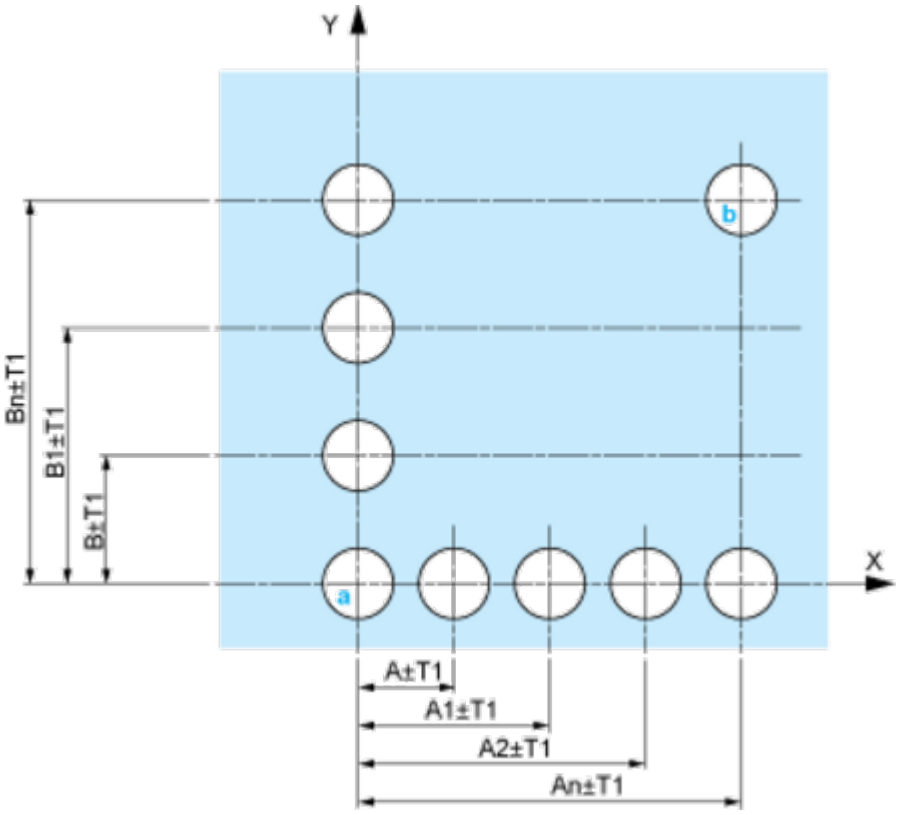


**A:** 30 mm min. / 1.18 in. min.
**B:** 40 mm min. / 1.57 in. min.

### Printed Circuit Board Cut-outs (Viewed from Electrical Block Side)

Dimensions in mm

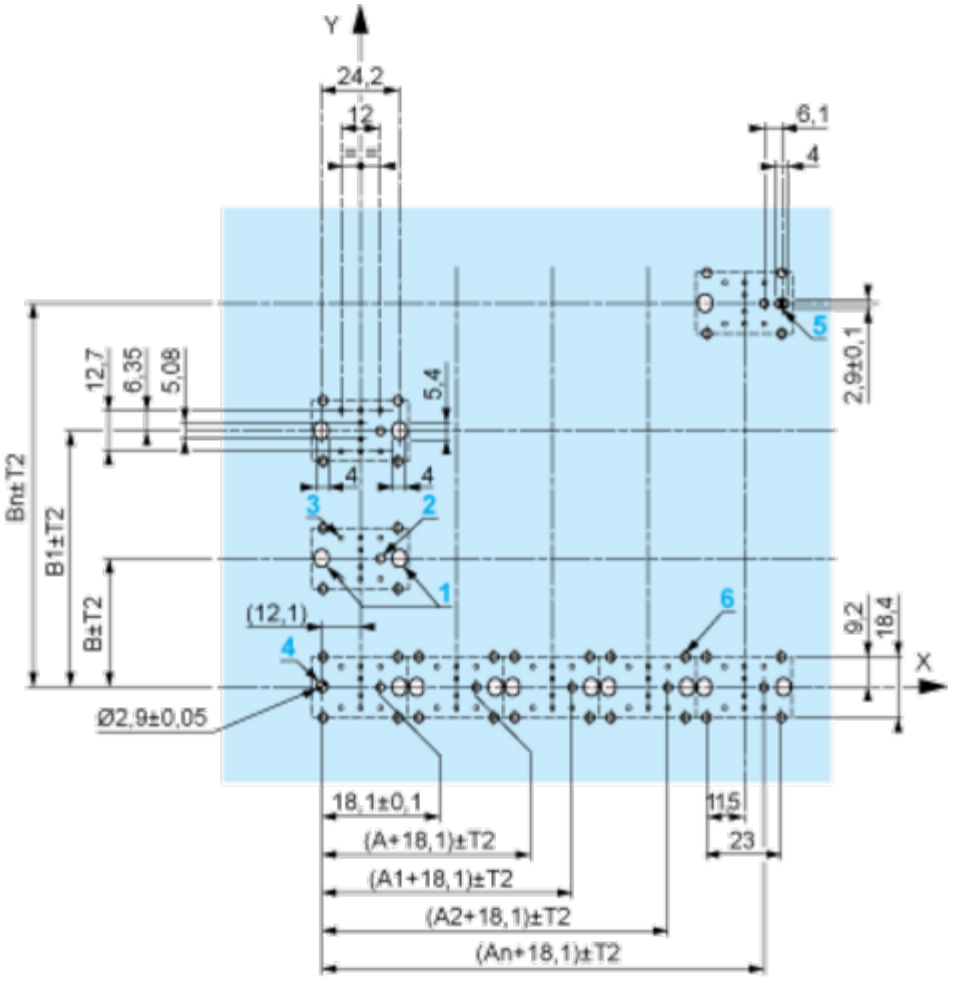


**A:** 30 mm min.
**B:** 40 mm min.
Dimensions in in.

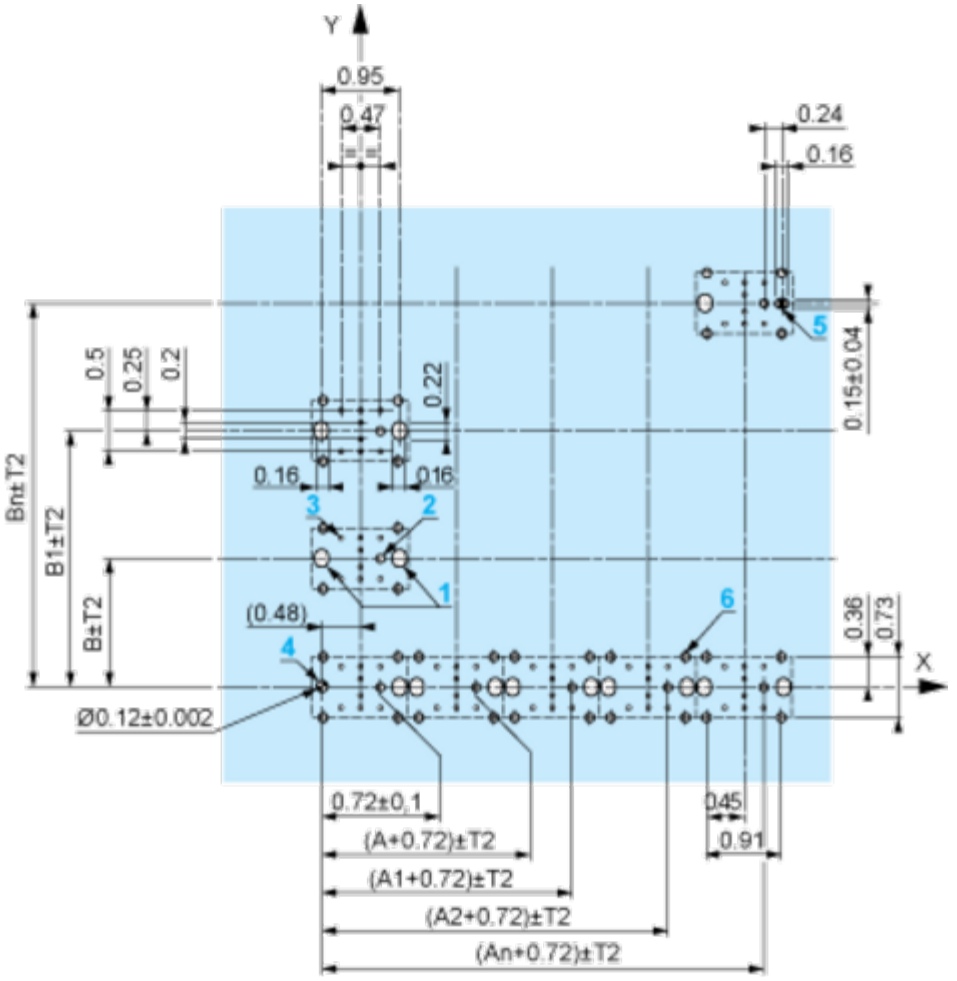


**A:** 1.18 in. min.
**B:** 1.57 in. min.

### General Tolerances of the Panel and Printed Circuit Board

The cumulative tolerance must not exceed 0.3 mm / 0.012 in: T1 + T2 = 0.3 mm max.

### Installation Precautions

- Minimum thickness of circuit board: 1.6 mm / 0.06 in.
- Cut-out diameter: 22.4 mm ± 0.1 / 0.88 in. ± 0.004
- Orientation of body/fixing collar ZB4 BZ009: ± 2°30' (excluding cut-outs marked **a** and **b**).
- Tightening torque of screws ZBZ 006: 0.6 N.m (5.3 lbf.in) max.
- Allow for one ZB4 BZ079 fixing collar/pillar and its fixing screws:
  - every 90 mm / 3.54 in. horizontally (X), and 120 mm / 4.72 in. vertically (Y).
  - with each selector switch head (ZB4 BD•, ZB4 BJ•, ZB4 BG•).

The fixing centers marked **a** and **b** are diagonally opposed and must align with those marked **4** and **5**.

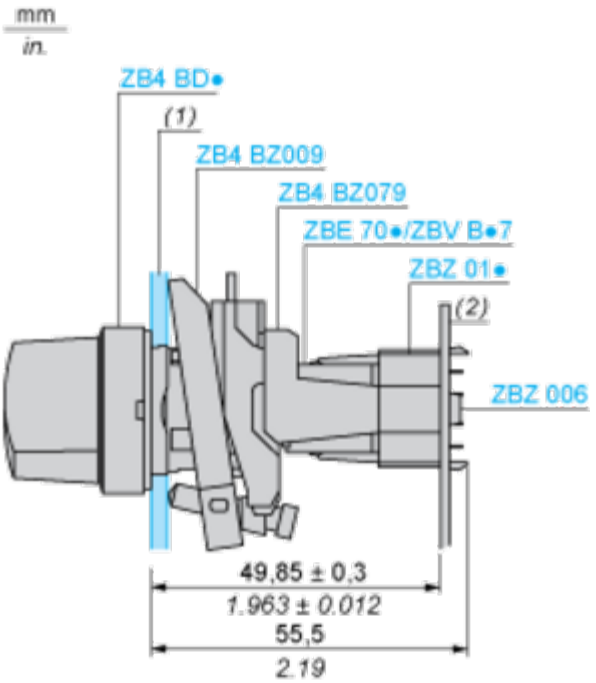


**(1)** Panel
**(2)** Printed circuit board

### Mounting of Adapter (Socket) ZBZ 01•

- **1** 2 elongated holes for ZBZ 006 screw access
- **2** 1 hole Ø 2.4 mm ± 0.05 / 0.09 in. ± 0.002 for centring adapter ZBZ 01•
- **3** 8 × Ø 1.2 mm / 0.05 in. holes
- **4** 1 hole Ø 2.9 mm ± 0.05 / 0.11 in. ± 0.002, for aligning the printed circuit board (with cut-out marked **a**)
- **5** 1 elongated hole for aligning the printed circuit board (with cut-out marked **b**)
- **6** 4 holes Ø 2.4 mm / 0.09 in. for clipping in adapter ZBZ 01•

Dimensions An + 18.1 relate to the Ø 2.4 mm ± 0.05 / 0.09 in. ± 0.002 holes for centring adapter ZBZ 01•.

Technical Description

## Electrical Composition Corresponding to Codes P1, P3, PF1, PR1 and PF2

Light block

## Electrical Composition Corresponding to Code P4

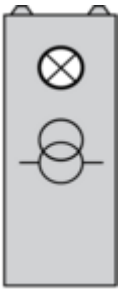

## Legend

Single contact

Double contact

Light block

Possible location