Product data sheet

Specifications

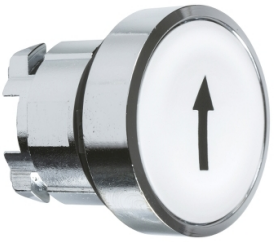

Head for non illuminated push button, Harmony XB4, metal, flush, white, 22mm, spring return, marked UP ARROW

ZB4BA334

Product availability: Stock - Normally stocked in distribution facility

Price*: 18.60 USD

Main

Range Of Product	Harmony XB4
Product Or Component Type	Head for non-illuminated push-button
Device Short Name	ZB4
Bezel Material	Chromium plated metal
Mounting Diameter	0.89 in (22.5 mm)
Sale Per Indivisible Quantity	1
Head Type	Standard
Shape Of Signaling Unit Head	Round
Type Of Operator	spring return
Operator Profile	White flush, up arrow black)
Cap/Operator Or Lens Colour	White

Complementary

Cad Overall Width	1.14 in (29 mm)
Cad Overall Height	1.14 in (29 mm)
Cad Overall Depth	1.10 in (28 mm)
Mechanical Durability	10000000 cycles
Electrical Composition Code	C1 9 single front mounting C2 9 single and double front mounting C11 3 single front mounting C15 1 single front mounting
Device Presentation	Basic element

Environment

Protective Treatment	TH
Ambient Air Temperature For Storage	-40…158 °F (-40…70 °C)
Ambient Air Temperature For Operation	-40…158 °F (-40…70 °C)
Overvoltage Category	Class I IEC 60536
Ip Degree Of Protection	IP66 IEC 60529 IP67 IP69 IP69K

Price is “List Price” and may be subject to a trade discount – check with your local distributor or retailer for actual price.

Disclaimer: This documentation is not intended as a substitute for and is not to be used for determining suitability or reliability of these products for specific user applications

Nema Degree Of Protection	NEMA 13 NEMA 4X
Ik Degree Of Protection	IK06 conforming to IEC 50102
Standards	CSA C22.2 No 14 IEC 60947-5-1 UL 508 JIS C8201-5-1 IEC 60947-5-4 IEC 60947-5-5 IEC 60947-1 JIS C8201-1
Product Certifications	DNV BV CSA LROS (Lloyds register of shipping) GL UL Listed
Vibration Resistance	5 gn 2…500 Hz)IEC 60068-2-6
Shock Resistance	30 gn 18 ms) half sine wave acceleration IEC 60068-2-27 50 gn 11 ms) half sine wave acceleration IEC 60068-2-27

Ordering and shipping details

Category	US10CS222468
Discount Schedule	0CS2
Gtin	3389110120080
Returnability	Yes
Country Of Origin	FR

Packing Units

Unit Type Of Package 1	PCE
Number Of Units In Package 1	1
Package 1 Height	1.34 in (3.4 cm)
Package 1 Width	1.77 in (4.5 cm)
Package 1 Length	2.13 in (5.4 cm)
Package 1 Weight	0.99 oz (28.0 g)
Unit Type Of Package 2	S03
Number Of Units In Package 2	300
Package 2 Height	11.81 in (30 cm)
Package 2 Width	11.81 in (30 cm)
Package 2 Length	15.75 in (40 cm)
Package 2 Weight	19.82 lb(US) (8.992 kg)

Contractual warranty

Warranty	18 months

Sustainability

Green Premium™ label is Schneider Electric's commitment to delivering products with best-in-class environmental performance. Green Premium promises compliance with the latest regulations, transparency on environmental impacts, as well as circular and low-CO_2 products.

Guide to assessing product sustainability is a white paper that clarifies global eco-label standards and how to interpret environmental declarations.

Learn more about Green Premium >

Guide to assess a product's sustainability >

Transparency RoHS/REACh

Well-being performance

Reach Free Of Svhc	
Toxic Heavy Metal Free	
Mercury Free	
Rohs Exemption Information	Yes

Certifications & Standards

Reach Regulation	REACh Declaration
Eu Rohs Directive	Pro-active compliance (Product out of EU RoHS legal scope) EU RoHS Declaration
China Rohs Regulation	China RoHS declaration
Environmental Disclosure	Product Environmental Profile
Circularity Profile	End of Life Information
California Proposition 65	WARNING: This product can expose you to chemicals including: Di-isodecyl phthalate (DIDP), which is known to the State of California to cause birth defects or other reproductive harm. For more information go to www.P65Warnings.ca.gov

Dimensions Drawings

Dimensions

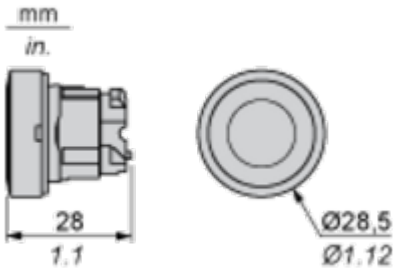

Mounting and Clearance

Panel Cut-out for Pushbuttons, Switches and Pilot Lights (Finished Holes, Ready for Installation)

Connection by Screw Clamp Terminals or Plug-in Connectors or on Printed Circuit Board	Connection by Faston Connectors
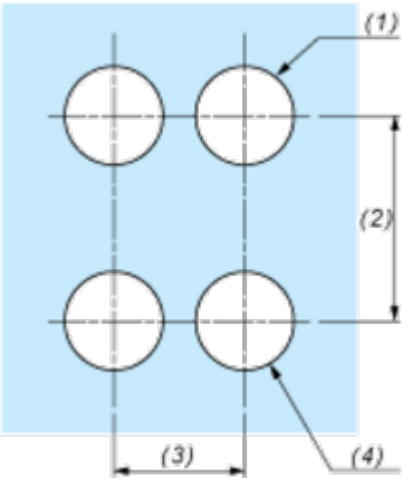	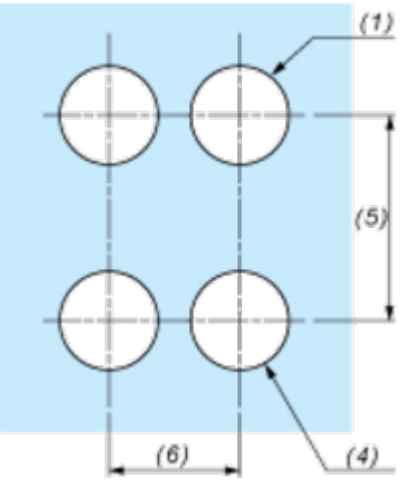

(1) Diameter on finished panel or support
(2) 40 mm min. / 1.57 in. min.
(3) 30 mm min. / 1.18 in. min.
(4) Ø 22.5 mm / 0.89 in. recommended (Ø 22.3 mm $_{0}^{+0.4}$ / 0.88 in. $_{0}^{+0.016}$)
(5) 45 mm min. / 1.78 in. min.
(6) 32 mm min. / 1.26 in. min.

Pushbuttons, Switches and Pilot Lights for Printed Circuit Board Connection

Panel Cut-outs (Viewed from Installer's Side)

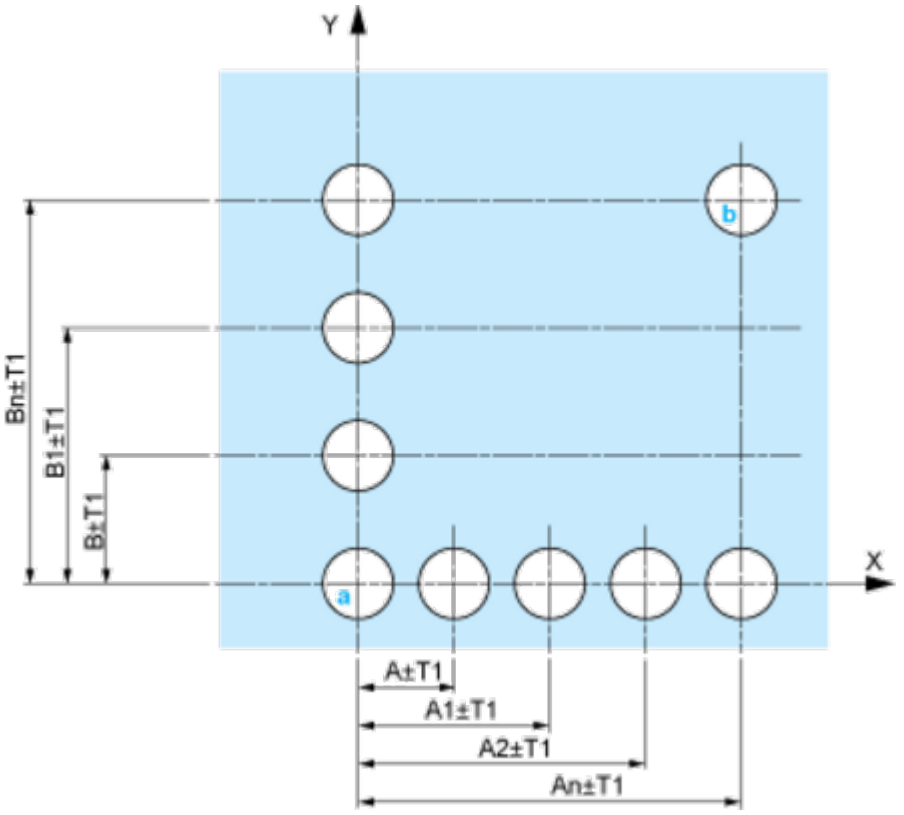

A: 30 mm min. / 1.18 in. min.
B: 40 mm min. / 1.57 in. min.

Printed Circuit Board Cut-outs (Viewed from Electrical Block Side)

Dimensions in mm

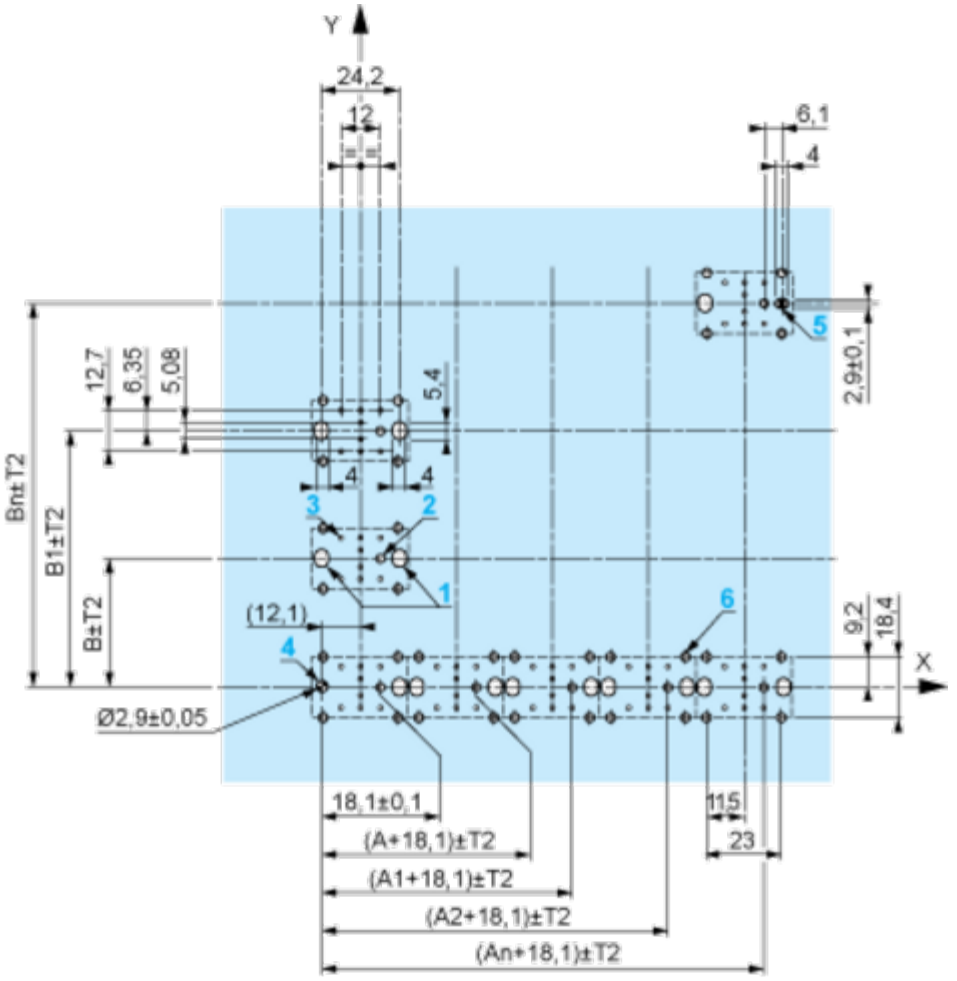

A: 30 mm min.
B: 40 mm min.
Dimensions in in.

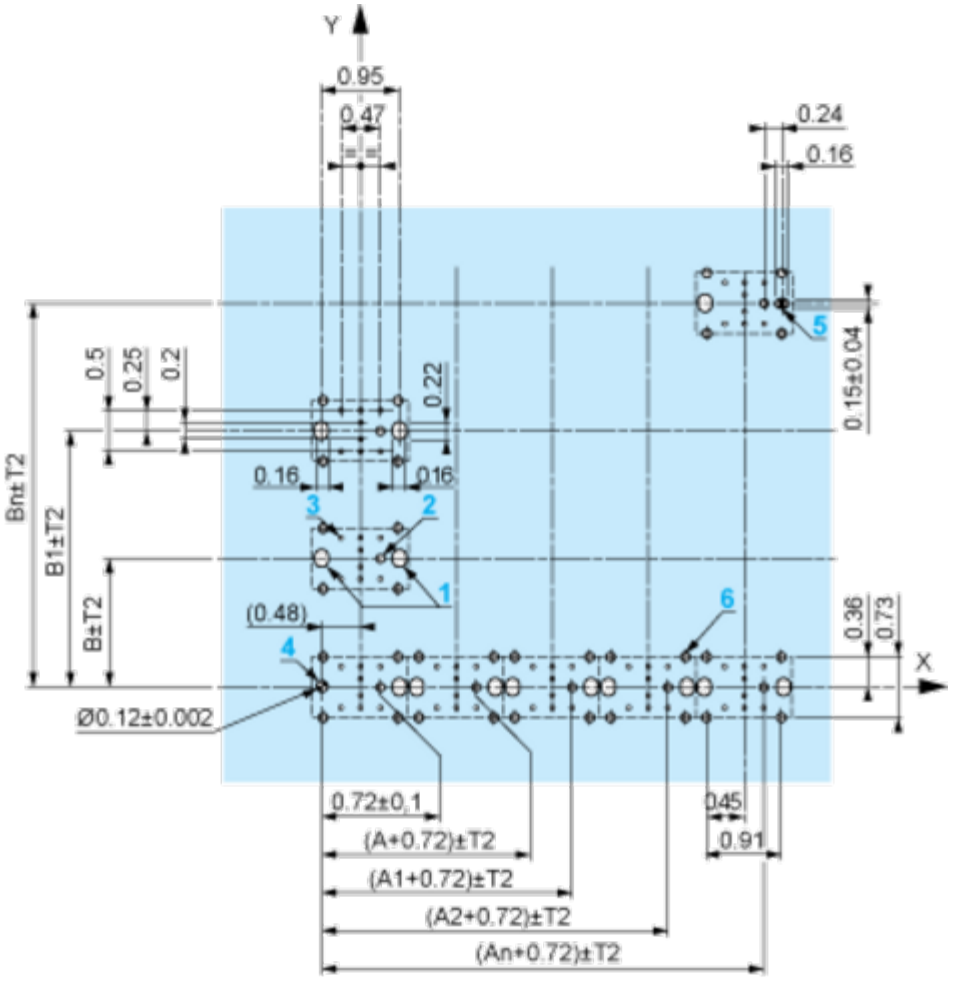

A: 1.18 in. min.
B: 1.57 in. min.

General Tolerances of the Panel and Printed Circuit Board

The cumulative tolerance must not exceed 0.3 mm / 0.012 in: T1 + T2 = 0.3 mm max.

Installation Precautions

- Minimum thickness of circuit board: 1.6 mm / 0.06 in.
- Cut-out diameter: 22.4 mm ± 0.1 / 0.88 in. ± 0.004
- Orientation of body/fixing collar ZB4 BZ009: ± 2°30' (excluding cut-outs marked **a** and **b**).
- Tightening torque of screws ZBZ 006: 0.6 N.m (5.3 lbf.in) max.
- Allow for one ZB4 BZ079 fixing collar/pillar and its fixing screws:
  - every 90 mm / 3.54 in. horizontally (X), and 120 mm / 4.72 in. vertically (Y).
  - with each selector switch head (ZB4 BD•, ZB4 BJ•, ZB4 BG•).

The fixing centers marked **a** and **b** are diagonally opposed and must align with those marked **4** and **5**.

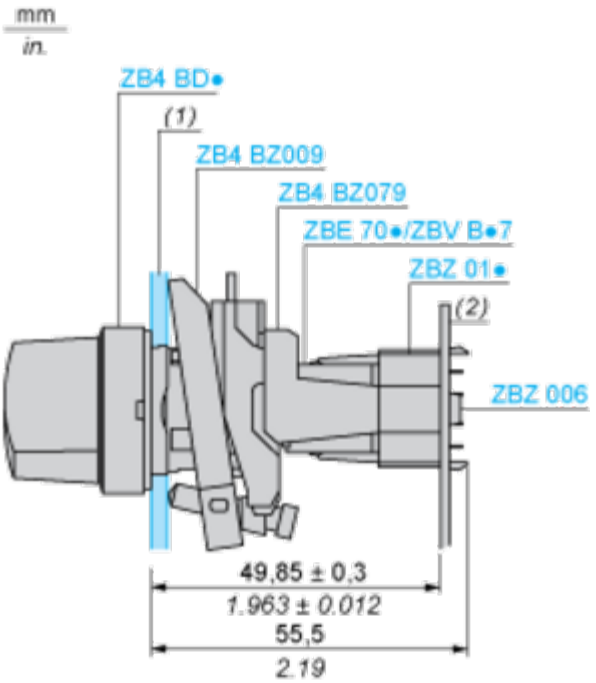

(1) Panel
(2) Printed circuit board

Mounting of Adapter (Socket) ZBZ 01•

- **1** 2 elongated holes for ZBZ 006 screw access
- **2** 1 hole Ø 2.4 mm ± 0.05 / 0.09 in. ± 0.002 for centring adapter ZBZ 01•
- **3** 8 × Ø 1.2 mm / 0.05 in. holes
- **4** 1 hole Ø 2.9 mm ± 0.05 / 0.11 in. ± 0.002, for aligning the printed circuit board (with cut-out marked **a**)
- **5** 1 elongated hole for aligning the printed circuit board (with cut-out marked **b**)
- **6** 4 holes Ø 2.4 mm / 0.09 in. for clipping in adapter ZBZ 01•

Dimensions An + 18.1 relate to the Ø 2.4 mm ± 0.05 / 0.09 in. ± 0.002 holes for centring adapter ZBZ 01•.

Technical Description

Electrical Composition Corresponding to Code C1

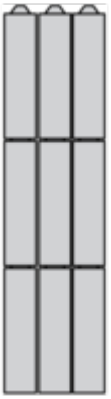

Electrical Composition Corresponding to Code C2

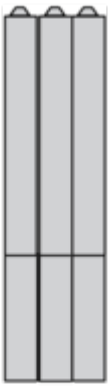

Electrical Composition Corresponding to Codes C9, C11, SF1 and SR1

Electrical Composition Corresponding to Code C15

1 N/O

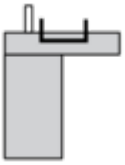

1 N/C

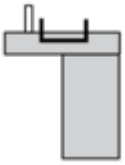

1 N/O + N/C or 1 N/O + N/O or 1 N/C + N/C

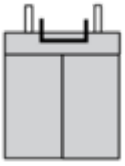

Legend

Single contact

Double contact

Light block

Possible location