Product data sheet

Specifications

Green Premium™

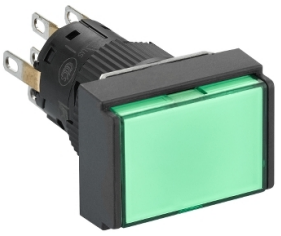

rectangle green illumin pushbutton Ø16-flush pushtorelease 24 VDCpolarised 2CO

XB6EDF3B2P

Discontinued on: Dec 2, 2020

End-of-service on: Dec 31, 2020

Discontinued

Main

Range Of Product	Harmony XB6E
Product Or Component Type	Illuminated monolithic push-button
Device Short Name	XB6E
Bezel Material	Plastic
Mounting Diameter	0.63 in (16 mm)
Sale Per Indivisible Quantity	5
Shape Of Signaling Unit Head	Rectangular
Type Of Operator	latching
Operator Profile	Green flush
Contacts Type And Composition	2 C/O
Contact Operation	Snap action
Connections - Terminals	Faston connectors 2.8 x 0.5 mm Soldered connectors
Contacts Material	Gold-flashed silver
Light Source	Integral LED
[Us] Rated Supply Voltage	24 V DC polarised

Complementary

Height	0.71 in (18 mm)
Width	0.94 in (24 mm)
Depth	1.57 in (40 mm)
Terminals Description Iso N°1	(13-14-11-12)OF (23-24-21-22)OF
Net Weight	0.01 lb(US) (0.006 kg)
Overvoltage Category	II IEC 60536
Operating Position	Any position
Marking	CE
Operating Force	1.3 N C/O changing electrical state
Mechanical Durability	250000 cycles
Short-Circuit Protection	3 A cartridge fuse gG

Price is “List Price” and may be subject to a trade discount – check with your local distributor or retailer for actual price.

Disclaimer: This documentation is not intended as a substitute for and is not to be used for determining suitability or reliability of these products for specific user applications

[Ith] Conventional Free Air Thermal Current	3 A
[Ui] Rated Insulation Voltage	250 V 2)IEC 60947-1
[Uimp] Rated Impulse Withstand Voltage	2.5 kV IEC 60947-1
Electrical Durability	50000 cycles, DC-12, 1 A 30 V IEC 60947-5-1 appendix C 50000 cycles, AC-12, 0.5 A 125 V IEC 60947-5-1 appendix C 50000 cycles, AC-12, 0.5 A 250 V IEC 60947-5-1 appendix C
Electrical Reliability	Λ = 10exp(-8) 5 V 1 mA with confidence level of 90 % IEC 60947-5-4
Signalling Type	Steady
Current Consumption	10 mA
Service Life	50000 h

Environment

Ambient Air Temperature For Storage	-40…158 °F (-40…70 °C)
Ambient Air Temperature For Operation	14…131 °F (-10…55 °C)
Ip Degree Of Protection	IP65 IEC 60529
Standards	IEC 60947-1 CSA C22.2 No 14 JIS C 852 IEC 60947-5-1 UL 508 JIS C 4520
Product Certifications	cURus CCC
Vibration Resistance	1 mm 5…55 Hz)IEC 60068-2-6 9 gn 5…55 Hz)IEC 60068-2-6
Shock Resistance	20 gn 11 ms) half sine wave acceleration IEC 60068-2-27
Electromagnetic Compatibility	Electrostatic discharge immunity test - test level: 8 kV conforming to IEC 61000-4-2

Ordering and shipping details

Category	22459-PUSHBUTTONS, 16MM
Discount Schedule	CS2
Gtin	3389110631975
Returnability	No
Country Of Origin	CN

Packing Units

Unit Type Of Package 1	PCE
Number Of Units In Package 1	1
Package 1 Height	1.10 in (2.8 cm)
Package 1 Width	2.87 in (7.3 cm)
Package 1 Length	7.28 in (18.5 cm)
Package 1 Weight	0.39 oz (11.0 g)
Unit Type Of Package 2	BAG
Number Of Units In Package 2	5
Package 2 Height	1.10 in (2.8 cm)

Package 2 Width	2.87 in (7.3 cm)
Package 2 Length	7.28 in (18.5 cm)
Package 2 Weight	1.94 oz (55.0 g)
Unit Type Of Package 3	S01
Number Of Units In Package 3	50
Package 3 Height	5.91 in (15.0 cm)
Package 3 Width	5.91 in (15.0 cm)
Package 3 Length	15.75 in (40.0 cm)
Package 3 Weight	27.34 oz (775.0 g)

Contractual warranty

Warranty	18 months

Sustainability

Green Premium™ label is Schneider Electric's commitment to delivering products with best-in-class environmental performance. Green Premium promises compliance with the latest regulations, transparency on environmental impacts, as well as circular and low-CO_2 products.

Guide to assessing product sustainability is a white paper that clarifies global eco-label standards and how to interpret environmental declarations.

Learn more about Green Premium >

Guide to assess a product's sustainability >

Transparency RoHS/REACh

Well-being performance

- Reach Free Of Svhc
- Mercury Free
- Rohs Exemption Information — Yes

Certifications & Standards

Reach Regulation	REACh Declaration
Eu Rohs Directive	Pro-active compliance (Product out of EU RoHS legal scope)
China Rohs Regulation	China RoHS declaration
Environmental Disclosure	Product Environmental Profile
Weee	The product must be disposed on European Union markets following specific waste collection and never end up in rubbish bins.
Circularity Profile	End of Life Information
California Proposition 65	WARNING: This product can expose you to chemicals including: Nickel compounds, which is known to the State of California to cause cancer, and Di-isodecyl phthalate (DIDP), which is known to the State of California to cause birth defects or other reproductive harm. For more information go to www.P65Warnings.ca.gov

Dimensions Drawings

Pushbutton

Rectangular Head

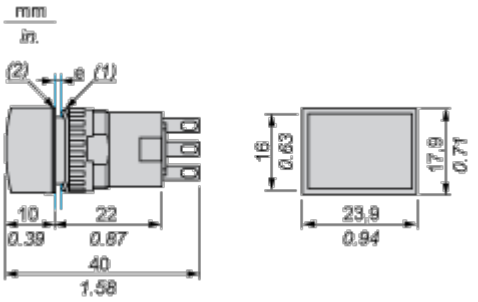

(1) Anti-rotation plate (thickness: 0.6 mm / 0.02 in.)

(2) Seal (thickness: 0.5 mm / 0.01 in.)

e panel thickness: 0.5 mm (0.01 in.) ≤ e ≤ 6 mm (0.24 in.)

Mounting and Clearance

Panel Cut-Out and Mounting
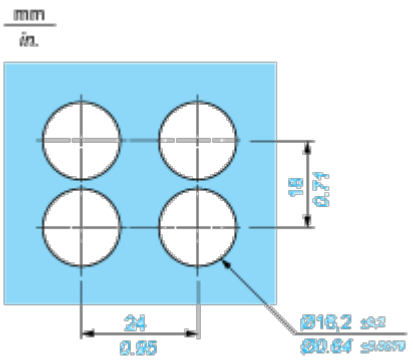
Rectangular Head