# Product data sheet

Specifications

Green Premium™

## Complete push button, Harmony XB6, white rectangular flush pushbutton Ø 16 spring return 1NO+1NC unmarked

XB6DA15B

Discontinued

Discontinued on: Oct 9, 2023

**Product availability: Non-Stock - Not normally stocked in distribution facility**

## Main

| | |
|---|---|
| **Range Of Product** | Harmony XB6 |
| **Product Or Component Type** | Complete push-button |
| **Device Short Name** | XB6 |
| **Bezel Material** | Plastic |
| **Mounting Diameter** | 0.63 in (16 mm) |
| **Sale Per Indivisible Quantity** | 1 |
| **Shape Of Signaling Unit Head** | Rectangular |
| **Type Of Operator** | spring return |
| **Operator Profile** | White flush, unmarked |
| **Contacts Type And Composition** | 1 NO + 1 NC |
| **Contact Operation** | Slow-break |
| **Connections - Terminals** | Faston connectors 2.8 x 0.5 mm |

## Complementary

| | |
|---|---|
| **Cad Overall Width** | 0.94 in (24 mm) |
| **Cad Overall Height** | 0.71 in (18 mm) |
| **Cad Overall Depth** | 2.24 in (57 mm) |
| **Terminals Description Iso N°1** | (13-14)NO<br>(21-22)NC |
| **Net Weight** | 0.05 lb(US) (0.022 kg) |
| **Operating Position** | Any position |
| **Positive Opening** | With EN/IEC 60947-5-1 appendix K |
| **Operating Travel** | 0.04 in (1 mm) NO changing electrical state)<br>0.08 in (2 mm) NC changing electrical state)<br>0.14 in (3.5 mm) total travel) |
| **Operating Force** | 3.5 N NO changing electrical state<br>4.5 N NC changing electrical state |
| **Mechanical Durability** | 2000000 cycles |
| **Contacts Material** | Silver alloy (Ag/Ni) |
| **Short-Circuit Protection** | 6 A cartridge fuse gG |

Price is “List Price” and may be subject to a trade discount – check with your local distributor or retailer for actual price.

Disclaimer: This documentation is not intended as a substitute for and is not to be used for determining suitability or reliability of these products for specific user applications

| | |
|---|---|
| **[Ui] Rated Insulation Voltage** | 250 V 3)EN/IEC 60947-1 |
| **[Uimp] Rated Impulse Withstand Voltage** | 4 kV EN/IEC 60947-1 |
| **[Ie] Rated Operational Current** | 3 A 120 V, AC-15, B300 EN/IEC 60947-5-1<br>1.5 A 240 V, AC-15, B300 EN/IEC 60947-5-1<br>0.1 A 250 V, DC-13, R300 EN/IEC 60947-5-1<br>0.22 A 125 V, DC-13, R300 EN/IEC 60947-5-1 |
| **Electrical Durability** | 1000000 cycles, AC-15 230 V 3600 cyc/h 0.5 EN/IEC 60947-5-1 appendix C<br>1000000 cycles, DC-13 230 V 3600 cyc/h 0.5 EN/IEC 60947-5-1 appendix C |
| **Electrical Reliability** | Λ = 10exp(-8) 5 V 1 mA with confidence level of 90 % IEC 60947-5-4 |

# Environment

| | |
|---|---|
| **Protective Treatment** | TC |
| **Ambient Air Temperature For Storage** | -40…158 °F (-40…70 °C) |
| **Ambient Air Temperature For Operation** | -13…158 °F (-25…70 °C) |
| **Electrical Shock Protection Class** | Class II IEC 61140 |
| **Ip Degree Of Protection** | IP65 IEC 60529 |
| **Nema Degree Of Protection** | NEMA 13 UL 50<br>NEMA 4 UL 50<br>NEMA 4X UL 50<br>NEMA 13 CSA C22.2 No 94<br>NEMA 4 CSA C22.2 No 94<br>NEMA 4X CSA C22.2 No 94 |
| **Standards** | EN/IEC 60947-5-5<br>EN/IEC 60947-1<br>UL 508<br>CSA C22.2 No 14<br>JIS C 4520<br>JIS C 852<br>EN/IEC 60947-5-1 |
| **Product Certifications** | CCC<br>UL<br>GOST<br>CSA |
| **Vibration Resistance** | +/- 3 mm 2…500 Hz)IEC 60068-2-6<br>5 gn 2…500 Hz)IEC 60068-2-6 |
| **Shock Resistance** | 30 gn 18 ms) half sine wave acceleration IEC 60068-2-27<br>50 gn 11 ms) half sine wave acceleration IEC 60068-2-27 |

# Ordering and shipping details

| | |
|---|---|
| **Category** | US10CS222459 |
| **Discount Schedule** | 0CS2 |
| **Gtin** | 3389110764246 |
| **Returnability** | Yes |

# Packing Units

| | |
|---|---|
| **Unit Type Of Package 1** | PCE |
| **Number Of Units In Package 1** | 1 |
| **Package 1 Height** | 0.98 in (2.5 cm) |
| **Package 1 Width** | 3.15 in (8.0 cm) |
| **Package 1 Length** | 2.76 in (7.0 cm) |
| **Package 1 Weight** | 0.53 oz (15.0 g) |

| | |
|---|---|
| **Unit Type Of Package 2** | BAG |
| **Number Of Units In Package 2** | 1 |
| **Package 2 Height** | 0.98 in (2.5 cm) |
| **Package 2 Width** | 3.15 in (8 cm) |
| **Package 2 Length** | 2.76 in (7 cm) |
| **Package 2 Weight** | 0.53 oz (15 g) |
| **Unit Type Of Package 3** | S01 |
| **Number Of Units In Package 3** | 60 |
| **Package 3 Height** | 5.91 in (15 cm) |
| **Package 3 Width** | 5.91 in (15 cm) |
| **Package 3 Length** | 15.75 in (40 cm) |
| **Package 3 Weight** | 2.48 lb(US) (1.125 kg) |

## Contractual warranty

| | |
|---|---|
| **Warranty** | 18 months |

## Sustainability

**Green Premium™ label** is Schneider Electric's commitment to delivering products with best-in-class environmental performance. Green Premium promises compliance with the latest regulations, transparency on environmental impacts, as well as circular and low-$CO_2$ products.

**Guide to assessing product sustainability** is a white paper that clarifies global eco-label standards and how to interpret environmental declarations.

Learn more about Green Premium >

Guide to assess a product's sustainability >

RoHS/REACh

## Well-being performance

- Reach Free Of Svhc
- Toxic Heavy Metal Free
- Mercury Free
- Rohs Exemption Information — Yes

## Certifications & Standards

| | |
|---|---|
| **Reach Regulation** | REACh Declaration |
| **Eu Rohs Directive** | Pro-active compliance (Product out of EU RoHS legal scope)<br>EU RoHS Declaration |
| **China Rohs Regulation** | China RoHS declaration |
| **Weee** | The product must be disposed on European Union markets following specific waste collection and never end up in rubbish bins. |
| **California Proposition 65** | WARNING: This product can expose you to chemicals including: Di-isodecyl phthalate (DIDP), which is known to the State of California to cause birth defects or other reproductive harm. For more information go to www.P65Warnings.ca.gov |

## Dimensions Drawings

### Rectangular Head Pushbutton

#### Dimensions

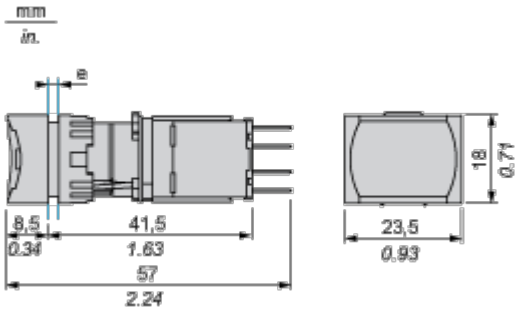


e panel thickness 1 to 6 mm/0.03 to 2.48 in.

Mounting and Clearance

## Panel Cut-out
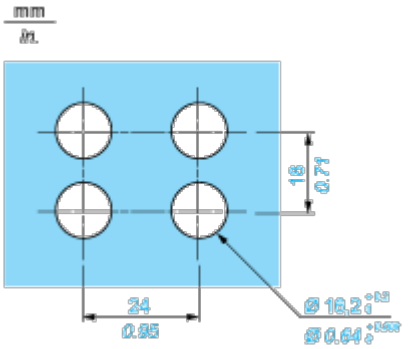
### For Rectangular Head