Product data sheet

Specifications

Complete push button, Harmony XB6, white rectangular flush pushbutton, 16mm, spring return, 1NO, unmarked

XB6DA11B

Product availability: Non-Stock - Not normally stocked in distribution facility

Price*: 26.20 USD

Main

Range Of Product	Harmony XB6
Product Or Component Type	Complete push-button
Device Short Name	XB6
Bezel Material	Plastic
Mounting Diameter	0.63 in (16 mm)
Sale Per Indivisible Quantity	1
Shape Of Signaling Unit Head	Rectangular
Type Of Operator	spring return
Operator Profile	White flush, unmarked
Contacts Type And Composition	1 NO
Contact Operation	Slow-break
Connections - Terminals	Faston connectors 2.8 x 0.5 mm

Complementary

Cad Overall Width	0.94 in (24 mm)
Cad Overall Height	0.71 in (18 mm)
Cad Overall Depth	2.24 in (57 mm)
Terminals Description Iso N°1	(13-14)NO
Net Weight	0.04 lb(US) (0.019 kg)
Operating Position	Any position
Positive Opening	With EN/IEC 60947-5-1 appendix K
Operating Travel	0.04 in (1 mm) NO changing electrical state) 0.14 in (3.5 mm) total travel)
Operating Force	3.5 N NO changing electrical state
Mechanical Durability	2000000 cycles
Contacts Material	Silver alloy (Ag/Ni)
Short-Circuit Protection	6 A cartridge fuse gG
[Ui] Rated Insulation Voltage	250 V 3)EN/IEC 60947-1
[Uimp] Rated Impulse Withstand Voltage	4 kV EN/IEC 60947-1

Price is “List Price” and may be subject to a trade discount – check with your local distributor or retailer for actual price.

Disclaimer: This documentation is not intended as a substitute for and is not to be used for determining suitability or reliability of these products for specific user applications

[Ie] Rated Operational Current	3 A 120 V, AC-15, B300 EN/IEC 60947-5-1 1.5 A 240 V, AC-15, B300 EN/IEC 60947-5-1 0.1 A 250 V, DC-13, R300 EN/IEC 60947-5-1 0.22 A 125 V, DC-13, R300 EN/IEC 60947-5-1
Electrical Durability	1000000 cycles, AC-15 230 V 3600 cyc/h 0.5 EN/IEC 60947-5-1 appendix C 1000000 cycles, DC-13 230 V 3600 cyc/h 0.5 EN/IEC 60947-5-1 appendix C
Electrical Reliability	Λ = 10exp(-8) 5 V 1 mA with confidence level of 90 % IEC 60947-5-4

Environment

Protective Treatment	TC
Ambient Air Temperature For Storage	-40…158 °F (-40…70 °C)
Ambient Air Temperature For Operation	-13…158 °F (-25…70 °C)
Electrical Shock Protection Class	Class II IEC 61140
Ip Degree Of Protection	IP65 IEC 60529
Nema Degree Of Protection	NEMA 13 UL 50 NEMA 4 UL 50 NEMA 4X UL 50 NEMA 13 CSA C22.2 No 94 NEMA 4 CSA C22.2 No 94 NEMA 4X CSA C22.2 No 94
Standards	EN/IEC 60947-5-1 JIS C 4520 CSA C22.2 No 14 EN/IEC 60947-1 JIS C 852 EN/IEC 60947-5-5 UL 508
Product Certifications	CSA UL CCC GOST
Vibration Resistance	+/- 3 mm 2…500 Hz)IEC 60068-2-6 5 gn 2…500 Hz)IEC 60068-2-6
Shock Resistance	30 gn 18 ms) half sine wave acceleration IEC 60068-2-27 50 gn 11 ms) half sine wave acceleration IEC 60068-2-27

Ordering and shipping details

Category	US10CS222459
Discount Schedule	0CS2
Gtin	3389110764215
Returnability	Yes
Country Of Origin	MX

Packing Units

Unit Type Of Package 1	PCE
Number Of Units In Package 1	1
Package 1 Height	1.22 in (3.1 cm)
Package 1 Width	1.69 in (4.3 cm)
Package 1 Length	5.04 in (12.8 cm)
Package 1 Weight	0.49 oz (14.0 g)
Unit Type Of Package 2	S01

Number Of Units In Package 2	60
Package 2 Height	5.91 in (15.0 cm)
Package 2 Width	5.91 in (15.0 cm)
Package 2 Length	15.75 in (40.0 cm)
Package 2 Weight	2.22 lb(US) (1.009 kg)

Contractual warranty

Warranty	18 months

Sustainability

Green Premium™ label is Schneider Electric's commitment to delivering products with best-in-class environmental performance. Green Premium promises compliance with the latest regulations, transparency on environmental impacts, as well as circular and low-CO_2 products.

Guide to assessing product sustainability is a white paper that clarifies global eco-label standards and how to interpret environmental declarations.

Learn more about Green Premium >

Guide to assess a product's sustainability >

RoHS/REACh

Well-being performance

- Reach Free Of Svhc
- Toxic Heavy Metal Free
- Mercury Free
- Rohs Exemption Information — Yes

Certifications & Standards

Reach Regulation	REACh Declaration
Eu Rohs Directive	Pro-active compliance (Product out of EU RoHS legal scope) EU RoHS Declaration
China Rohs Regulation	China RoHS declaration
Weee	The product must be disposed on European Union markets following specific waste collection and never end up in rubbish bins.
California Proposition 65	WARNING: This product can expose you to chemicals including: Di-isodecyl phthalate (DIDP), which is known to the State of California to cause birth defects or other reproductive harm. For more information go to www.P65Warnings.ca.gov

Dimensions Drawings

Rectangular Head Pushbutton

Dimensions

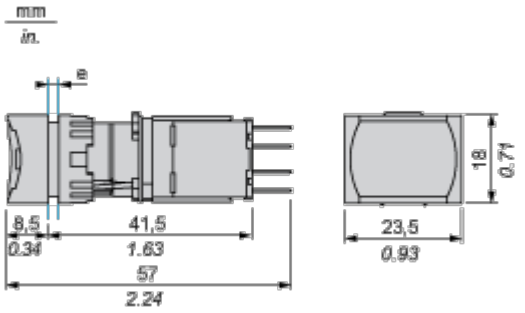

e panel thickness 1 to 6 mm/0.03 to 2.48 in.

Mounting and Clearance

Panel Cut-out
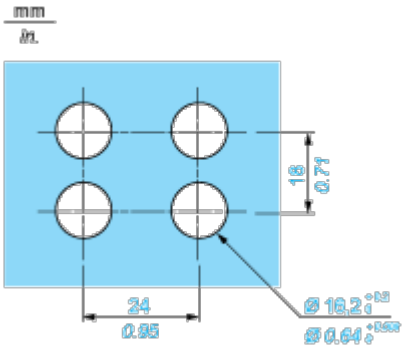
For Rectangular Head