# Product data sheet

Specifications

Green Premium™



## Illuminated push button, Harmony XB5, plastic, red flush, 22mm, universal LED, plain lens, 1NO + 1NC, 110...120V AC

XB5AW34G5

**Product availability: Stock - Normally stocked in distribution facility**
**Important message: Viktig information: en förändring i utseendet kan observeras på produkten, men detta påverkar inte dess användning i termer av funktion och säkerhet. Detta gör den kompatibel med våra Universal LED-block**

**Price*: 119.00 USD**

## Main

| | |
|---|---|
| **Range Of Product** | Harmony XB5 |
| **Product Or Component Type** | Illuminated push-button |
| **Device Short Name** | XB5 |
| **Bezel Material** | Dark grey plastic |
| **Fixing Collar Material** | Plastic |
| **Head Type** | Standard |
| **Mounting Diameter** | 0.89 in (22.5 mm) |
| **Sale Per Indivisible Quantity** | 1 |
| **Shape Of Signaling Unit Head** | Round |
| **Type Of Operator** | spring return |
| **Operator Profile** | Red flush, unmarked |
| **Operator Additional Information** | With plain lens |
| **Contacts Type And Composition** | 1 NO + 1 NC |
| **Contact Operation** | Slow-break |
| **Connections - Terminals** | Screw clamp terminals, <= 2 x 1.5 mm² with cable end IEC 60947-1<br>Screw clamp terminals, 1 x 0.22...2 x 2.5 mm² without cable end IEC 60947-1 |
| **Light Source** | Universal LED |
| **Bulb Base** | Integral LED |
| **[Us] Rated Supply Voltage** | 110...120 V AC 50/60 Hz |
| **Cap/Operator Or Lens Colour** | Red |

## Complementary

| | |
|---|---|
| **Height** | 1.65 in (42 mm) |
| **Width** | 1.18 in (30 mm) |
| **Depth** | 2.24 in (57 mm) |
| **Terminals Description Iso N°1** | (13-14)NO<br>(21-22)NC |

Price is “List Price” and may be subject to a trade discount – check with your local distributor or retailer for actual price.

Disclaimer: This documentation is not intended as a substitute for and is not to be used for determining suitability or reliability of these products for specific user applications

| | |
|---|---|
| **Net Weight** | 0.12 lb(US) (0.056 kg) |
| **Resistance To High Pressure Washer** | 1015.26 psi (7000000 Pa) 131 °F (55 °C) 0.1 m |
| **Contacts Usage** | Standard contacts |
| **Positive Opening** | With IEC 60947-5-1 appendix K |
| **Operating Travel** | 0.06 in (1.5 mm) NC changing electrical state)<br>0.10 in (2.6 mm) NO changing electrical state)<br>0.17 in (4.3 mm) total travel) |
| **Operating Force** | 3.5 N NC changing electrical state<br>3.8 N |
| **Mechanical Durability** | 10000000 cycles |
| **Tightening Torque** | 7.08…10.62 lbf.in (0.8…1.2 N.m) IEC 60947-1 |
| **Shape Of Screw Head** | Cross Philips no 1<br>Cross pozidriv No 1<br>Slotted flat Ø 4 mm<br>Slotted flat Ø 5.5 mm |
| **Contacts Material** | Silver alloy (Ag/Ni) |
| **Short-Circuit Protection** | 10 A cartridge fuse gG IEC 60947-5-1 |
| **[Ith] Conventional Free Air Thermal Current** | 10 A IEC 60947-5-1 |
| **[Ui] Rated Insulation Voltage** | 600 V 3)IEC 60947-1 |
| **[Uimp] Rated Impulse Withstand Voltage** | 6 kV IEC 60947-1 |
| **[Ie] Rated Operational Current** | 3 A 240 V, AC-15, A600 IEC 60947-5-1<br>6 A 120 V, AC-15, A600 IEC 60947-5-1<br>0.1 A 600 V, DC-13, Q600 IEC 60947-5-1<br>0.27 A 250 V, DC-13, Q600 IEC 60947-5-1<br>0.55 A 125 V, DC-13, Q600 IEC 60947-5-1<br>1.2 A 600 V, AC-15, A600 IEC 60947-5-1 |
| **Electrical Durability** | 1000000 cycles, AC-15, 2 A 230 V 3600 cyc/h 0.5 IEC 60947-5-1 appendix C<br>1000000 cycles, AC-15, 3 A 120 V 3600 cyc/h 0.5 IEC 60947-5-1 appendix C<br>1000000 cycles, AC-15, 4 A 24 V 3600 cyc/h 0.5 IEC 60947-5-1 appendix C<br>1000000 cycles, DC-13, 0.2 A 110 V 3600 cyc/h 0.5 IEC 60947-5-1 appendix C<br>1000000 cycles, DC-13, 0.5 A 24 V 3600 cyc/h 0.5 IEC 60947-5-1 appendix C |
| **Electrical Reliability** | Λ < 10exp(-6) 5 V, 1 mA in clean environment IEC 60947-5-4<br>Λ < 10exp(-8) 17 V, 5 mA in clean environment IEC 60947-5-4 |
| **Signalling Type** | Steady |
| **Supply Voltage Limits** | 100…132 V AC |
| **Current Consumption** | 14 mA |
| **Service Life** | 100000 h at rated voltage and 25 °C |
| **Surge Withstand** | 1 kV IEC 61000-4-5 |
| **Device Presentation** | Complete product |

# Environment

| | |
|---|---|
| **Protective Treatment** | TH |
| **Ambient Air Temperature For Storage** | -40…158 °F (-40…70 °C) |
| **Ambient Air Temperature For Operation** | -40…158 °F (-40…70 °C) |
| **Overvoltage Category** | Class II IEC 60536 |
| **Ip Degree Of Protection** | IP66 IEC 60529<br>IP69<br>IP69K<br>IP67 |

| | |
|---|---|
| **Nema Degree Of Protection** | NEMA 13<br>NEMA 4X |
| **Ik Degree Of Protection** | IK05 conforming to IEC 50102 |
| **Standards** | UL 508<br>CSA C22.2 No 14<br>IEC 60947-1<br>JIS C8201-5-1<br>IEC 60947-5-4<br>IEC 60947-5-1<br>JIS C8201-1 |
| **Product Certifications** | BV<br>CSA<br>UL Listed<br>LROS (Lloyds register of shipping)<br>GL<br>DNV |
| **Vibration Resistance** | 5 gn 2…500 Hz)IEC 60068-2-6 |
| **Shock Resistance** | 30 gn 18 ms) half sine wave acceleration IEC 60068-2-27<br>50 gn 11 ms) half sine wave acceleration IEC 60068-2-27 |
| **Resistance To Fast Transients** | 2 kV IEC 61000-4-4 |
| **Resistance To Electromagnetic Fields** | 9.14 V/m (10 V/m) IEC 61000-4-3 |
| **Resistance To Electrostatic Discharge** | 6 kV on contact (on metal parts) IEC 61000-4-2<br>8 kV in free air (in insulating parts) IEC 61000-4-2 |
| **Electromagnetic Emission** | Class B IEC 55011 |

## Ordering and shipping details

| | |
|---|---|
| **Category** | US10CS222467 |
| **Discount Schedule** | 0CS2 |
| **Gtin** | 3389110904130 |
| **Returnability** | Yes |
| **Country Of Origin** | FR |

## Packing Units

| | |
|---|---|
| **Unit Type Of Package 1** | PCE |
| **Number Of Units In Package 1** | 1 |
| **Package 1 Height** | 1.26 in (3.200 cm) |
| **Package 1 Width** | 2.05 in (5.200 cm) |
| **Package 1 Length** | 3.31 in (8.400 cm) |
| **Package 1 Weight** | 1.94 oz (55.000 g) |
| **Unit Type Of Package 2** | BB1 |
| **Number Of Units In Package 2** | 5 |
| **Package 2 Height** | 3.46 in (8.800 cm) |
| **Package 2 Width** | 1.34 in (3.400 cm) |
| **Package 2 Length** | 10.43 in (26.500 cm) |
| **Package 2 Weight** | 9.84 oz (279.000 g) |
| **Unit Type Of Package 3** | S02 |
| **Number Of Units In Package 3** | 50 |
| **Package 3 Height** | 5.91 in (15.000 cm) |

| | |
|---|---|
| **Package 3 Width** | 11.81 in (30.000 cm) |
| **Package 3 Length** | 15.75 in (40.000 cm) |
| **Package 3 Weight** | 6.72 lb(US) (3.046 kg) |

## Contractual warranty

| | |
|---|---|
| **Warranty** | 18 months |

## Sustainability

**Green Premium™ label** is Schneider Electric's commitment to delivering products with best-in-class environmental performance. Green Premium promises compliance with the latest regulations, transparency on environmental impacts, as well as circular and low-$CO_2$ products.

**Guide to assessing product sustainability** is a white paper that clarifies global eco-label standards and how to interpret environmental declarations.

Learn more about Green Premium >

Guide to assess a product's sustainability >

Transparency RoHS/REACh

## Well-being performance

Mercury Free

| | |
|---|---|
| Rohs Exemption Information | Yes |

## Certifications & Standards

| | |
|---|---|
| **Reach Regulation** | REACh Declaration |
| **Eu Rohs Directive** | Pro-active compliance (Product out of EU RoHS legal scope) |
| **China Rohs Regulation** | China RoHS declaration |
| **Environmental Disclosure** | Product Environmental Profile |
| **Weee** | The product must be disposed on European Union markets following specific waste collection and never end up in rubbish bins. |
| **Circularity Profile** | End of Life Information |
| **California Proposition 65** | WARNING: This product can expose you to chemicals including: Lead and lead compounds, which is known to the State of California to cause cancer and birth defects or other reproductive harm. For more information go to www.P65Warnings.ca.gov |

## Dimensions Drawings

### Dimensions

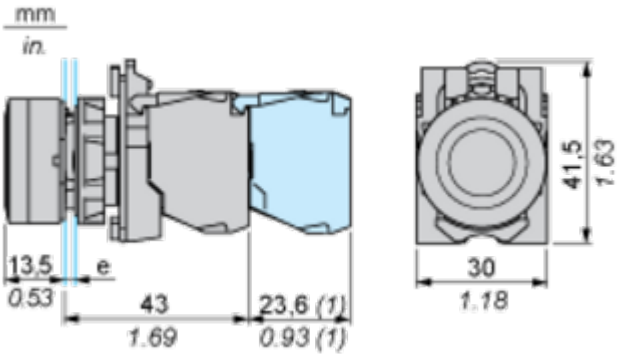


**e:** clamping thickness: 1 to 6 mm / 0.04 to 0.24 in.
**(1)** Additional row of contacts or double contact.

## Mounting and Clearance

### Panel Cut-out for Pushbuttons, Switches and Pilot Lights (Finished Holes, Ready for Installation)

### Connection by Screw Clamp Terminals or Plug-in Connectors or on Printed Circuit Board

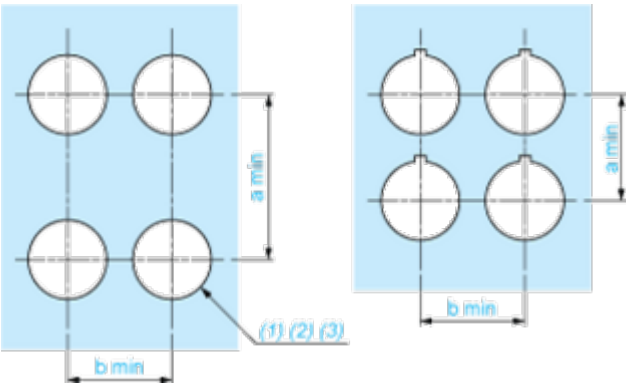


**(1)** Diameter on finished panel or support
**(2)** For selector switches and Emergency stop buttons, use of an anti-rotation plate type ZB5AZ902 is recommended.
**(3)** Ø22.5 mm recommended (Ø22.3 $_{0}^{+0.4}$) / Ø0.89 in. recommended (Ø0.88 in. $_{0}^{+0.016}$)

| Connections | a in mm | a in in. | b in mm | b in in. |
|---|---|---|---|---|
| By screw clamp terminals or plug-in connector | 40 | 1.57 | 30 | 1.18 |
| By Faston connectors | 45 | 1.77 | 32 | 1.26 |
| On printed circuit board | 30 | 1.18 | 30 | 1.18 |

### Detail of Lug Recess

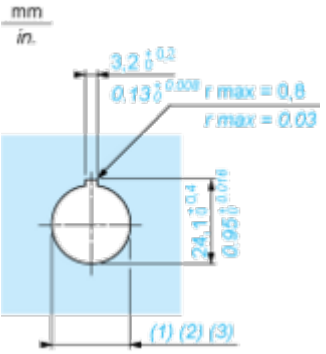


**(1)** Diameter on finished panel or support
**(2)** For selector switches and Emergency stop buttons, use of an anti-rotation plate type ZB5AZ902 is recommended.
**(3)** Ø22.5 mm recommended (Ø22.3 $_{0}^{+0.4}$) / Ø0.89 in. recommended (Ø0.88 in. $_{0}^{+0.016}$)