Product data sheet

Specifications

Green Premium™

green flush complete illum pushbutton Ø22 spring return 1NO+1NC 110...120V

XB5AW3335

Discontinued on: Dec 2, 2020

End-of-service on: Dec 31, 2020

Discontinued

Product availability: Non-Stock - Not normally stocked in distribution facility

Main

Range Of Product	Harmony XB5
Product Or Component Type	Illuminated push-button
Device Short Name	XB5
Bezel Material	Dark grey plastic
Fixing Collar Material	Plastic
Head Type	Standard
Mounting Diameter	0.87 in (22 mm)
Sale Per Indivisible Quantity	1
Shape Of Signaling Unit Head	Round
Type Of Operator	spring return
Operator Profile	Green flush, unmarked
Operator Additional Information	With plain lens
Contacts Type And Composition	1 NO + 1 NC
Contact Operation	Slow-break
Connections - Terminals	Screw clamp terminals, <= 2 x 1.5 mm² with cable end EN/IEC 60947-1 Screw clamp terminals, 1 x 0.22...2 x 2.5 mm² without cable end EN/IEC 60947-1
Light Source	Incandescent
Bulb Base	BA 9s
Light Block Supply	Via integral transformer 1.2 VA 6 V
[Us] Rated Supply Voltage	110...120 V AC 50/60 Hz
Cap/Operator Or Lens Colour	Green

Complementary

Height	1.65 in (42 mm)
Width	1.18 in (30 mm)
Depth	3.98 in (101 mm)
Terminals Description Iso N°1	(13-14)NO (21-22)NC
Net Weight	0.28 lb(US) (0.128 kg)

Price is “List Price” and may be subject to a trade discount – check with your local distributor or retailer for actual price.

Disclaimer: This documentation is not intended as a substitute for and is not to be used for determining suitability or reliability of these products for specific user applications

Resistance To High Pressure Washer	1015.26 psi (7000000 Pa) 131 °F (55 °C) 0.1 m
Contacts Usage	Standard contacts
Positive Opening	With EN/IEC 60947-5-1 appendix K
Operating Travel	0.06 in (1.5 mm) NC changing electrical state) 0.10 in (2.6 mm) NO changing electrical state) 0.17 in (4.3 mm) total travel)
Operating Force	3.5 N NC changing electrical state 3.8 N
Mechanical Durability	10000000 cycles
Tightening Torque	7.08…10.62 lbf.in (0.8…1.2 N.m) EN 60947-1
Shape Of Screw Head	Cross Philips no 1 Cross pozidriv No 1 Slotted flat Ø 4 mm Slotted flat Ø 5.5 mm
Contacts Material	Silver alloy (Ag/Ni)
Short-Circuit Protection	10 A cartridge fuse gG EN/IEC 60947-5-1
[Ith] Conventional Free Air Thermal Current	10 A EN/IEC 60947-5-1
[Ui] Rated Insulation Voltage	600 V 3)EN/IEC 60947-1
[Uimp] Rated Impulse Withstand Voltage	6 kV EN/IEC 60947-1
[Ie] Rated Operational Current	3 A 240 V, AC-15, A600 EN/IEC 60947-5-1 6 A 120 V, AC-15, A600 EN/IEC 60947-5-1 0.1 A 600 V, DC-13, Q600 EN/IEC 60947-5-1 0.27 A 250 V, DC-13, Q600 EN/IEC 60947-5-1 0.55 A 125 V, DC-13, Q600 EN/IEC 60947-5-1 1.2 A 600 V, AC-15, A600 EN/IEC 60947-5-1
Electrical Durability	1000000 cycles, AC-15, 2 A 230 V 3600 cyc/h 0.5 EN/IEC 60947-5-1 appendix C 1000000 cycles, AC-15, 3 A 120 V 3600 cyc/h 0.5 EN/IEC 60947-5-1 appendix C 1000000 cycles, AC-15, 4 A 24 V 3600 cyc/h 0.5 EN/IEC 60947-5-1 appendix C 1000000 cycles, DC-13, 0.2 A 110 V 3600 cyc/h 0.5 EN/IEC 60947-5-1 appendix C 1000000 cycles, DC-13, 0.5 A 24 V 3600 cyc/h 0.5 EN/IEC 60947-5-1 appendix C
Electrical Reliability	Λ < 10exp(-6) 5 V, 1 mA in clean environment EN/IEC 60947-5-4 Λ < 10exp(-8) 17 V, 5 mA in clean environment EN/IEC 60947-5-4
Signalling Type	Steady
Device Presentation	Complete product

Environment

Protective Treatment	TH
Ambient Air Temperature For Storage	-40…158 °F (-40…70 °C)
Ambient Air Temperature For Operation	-40…131 °F (-40…55 °C)
Overvoltage Category	Class II IEC 60536
Ip Degree Of Protection	IP66 IEC 60529 IP69 IP69K IP67
Nema Degree Of Protection	NEMA 13 NEMA 4X
Ik Degree Of Protection	IK05 conforming to IEC 50102

Standards	JIS C8201-5-1 EN/IEC 60947-1 UL 508 EN/IEC 60947-5-1 EN/IEC 60947-5-4 CSA C22.2 No 14 JIS C8201-1
Product Certifications	GL UL Listed CSA DNV BV LROS (Lloyds register of shipping)
Vibration Resistance	5 gn 2…500 Hz)IEC 60068-2-6
Shock Resistance	30 gn 18 ms) half sine wave acceleration IEC 60068-2-27 50 gn 11 ms) half sine wave acceleration IEC 60068-2-27

Ordering and shipping details

Category	US10CS222467
Discount Schedule	0CS2
Gtin	3389110904093
Returnability	No
Country Of Origin	CZ

Packing Units

Unit Type Of Package 1	PCE
Number Of Units In Package 1	1
Package 1 Height	5.04 in (12.8 cm)
Package 1 Width	1.34 in (3.4 cm)
Package 1 Length	1.89 in (4.8 cm)
Package 1 Weight	4.51 oz (128 g)

Contractual warranty

Warranty	18 months

Sustainability

Green Premium™ label is Schneider Electric's commitment to delivering products with best-in-class environmental performance. Green Premium promises compliance with the latest regulations, transparency on environmental impacts, as well as circular and low-CO_2 products.

Guide to assessing product sustainability is a white paper that clarifies global eco-label standards and how to interpret environmental declarations.

Learn more about Green Premium >

Guide to assess a product's sustainability >

Transparency RoHS/REACh

Well-being performance

Mercury Free

Rohs Exemption Information	Yes

Certifications & Standards

Reach Regulation	REACh Declaration
Eu Rohs Directive	Pro-active compliance (Product out of EU RoHS legal scope)
China Rohs Regulation	China RoHS declaration
Environmental Disclosure	Product Environmental Profile
Weee	The product must be disposed on European Union markets following specific waste collection and never end up in rubbish bins.
Circularity Profile	End of Life Information
California Proposition 65	WARNING: This product can expose you to chemicals including: Lead and lead compounds, which is known to the State of California to cause cancer and birth defects or other reproductive harm. For more information go to www.P65Warnings.ca.gov

Dimensions Drawings

Dimensions

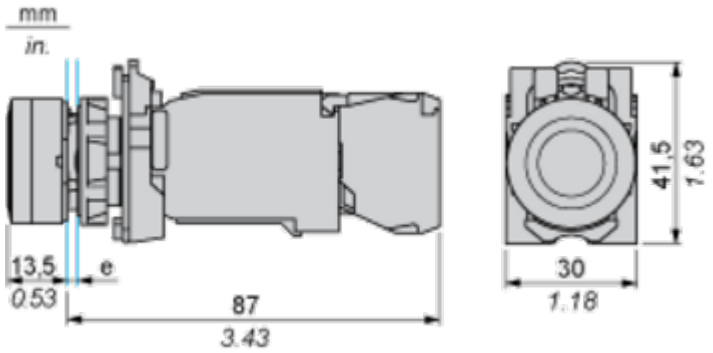

e: clamping thickness: 1 to 6 mm / 0.04 to 0.24 in.

Mounting and Clearance

Panel Cut-out for Pushbuttons, Switches and Pilot Lights (Finished Holes, Ready for Installation)

Connection by Screw Clamp Terminals or Plug-in Connectors or on Printed Circuit Board

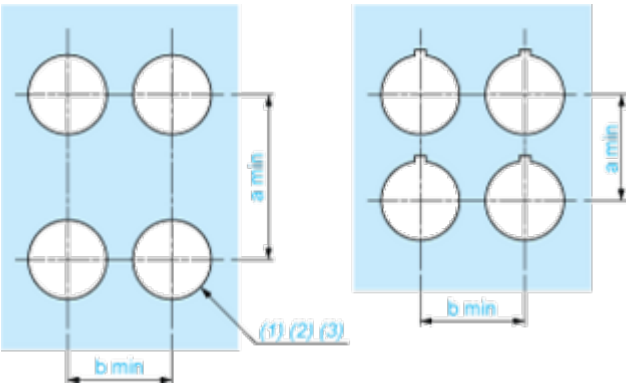

(1) Diameter on finished panel or support
(2) For selector switches and Emergency stop buttons, use of an anti-rotation plate type ZB5AZ902 is recommended.
(3) Ø22.5 mm recommended (Ø22.3 $_{0}^{+0.4}$) / Ø0.89 in. recommended (Ø0.88 in. $_{0}^{+0.016}$)

Connections	a in mm	a in in.	b in mm	b in in.
By screw clamp terminals or plug-in connector	40	1.57	30	1.18
By Faston connectors	45	1.77	32	1.26
On printed circuit board	30	1.18	30	1.18

Detail of Lug Recess

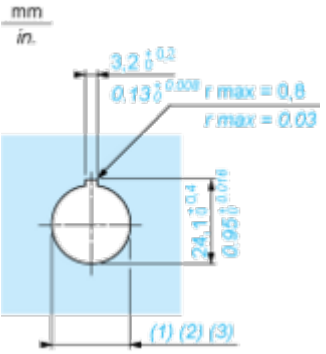

(1) Diameter on finished panel or support
(2) For selector switches and Emergency stop buttons, use of an anti-rotation plate type ZB5AZ902 is recommended.
(3) Ø22.5 mm recommended (Ø22.3 $_{0}^{+0.4}$) / Ø0.89 in. recommended (Ø0.88 in. $_{0}^{+0.016}$)