Product data sheet

Specifications

Illuminated push button, Harmony XB5, white flush, plastic, 22mm, spring return, 1NO + 1NC, 250V

XB5AW3165

Product availability: Non-Stock - Not normally stocked in distribution facility

Price*: 148.50 USD

Main

Range Of Product	Harmony XB5
Product Or Component Type	Illuminated push-button
Device Short Name	XB5
Bezel Material	Dark grey plastic
Fixing Collar Material	Plastic
Head Type	Standard
Mounting Diameter	0.89 in (22.5 mm)
Sale Per Indivisible Quantity	1
Shape Of Signaling Unit Head	Round
Type Of Operator	spring return
Operator Profile	White flush, unmarked
Operator Additional Information	With plain lens
Contacts Type And Composition	1 NO + 1 NC
Contact Operation	Slow-break
Connections - Terminals	Screw clamp terminals, <= 2 x 1.5 mm² with cable end IEC 60947-1 Screw clamp terminals, 1 x 0.22...2 x 2.5 mm² without cable end IEC 60947-1
Light Source	Bulb not included
Bulb Base	BA 9s
Light Block Supply	Direct <2.4 W
[Us] Rated Supply Voltage	<= 250 V
Cap/Operator Or Lens Colour	White

Complementary

Height	1.65 in (42 mm)
Width	1.18 in (30 mm)
Depth	2.13 in (54 mm)
Terminals Description Iso N°1	(13-14)NO (21-22)NC
Net Weight	0.13 lb(US) (0.057 kg)
Resistance To High Pressure Washer	1015.26 psi (7000000 Pa) 131 °F (55 °C) 0.1 m
Contacts Usage	Standard contacts

Price is “List Price” and may be subject to a trade discount – check with your local distributor or retailer for actual price.

Disclaimer: This documentation is not intended as a substitute for and is not to be used for determining suitability or reliability of these products for specific user applications

Positive Opening	With IEC 60947-5-1 appendix K
Operating Travel	0.06 in (1.5 mm) NC changing electrical state) 0.10 in (2.6 mm) NO changing electrical state) 0.17 in (4.3 mm) total travel)
Operating Force	3.5 N NC changing electrical state 3.8 N
Mechanical Durability	10000000 cycles
Tightening Torque	7.08…10.62 lbf.in (0.8…1.2 N.m) IEC 60947-1
Shape Of Screw Head	Cross Philips no 1 Cross pozidriv No 1 Slotted flat Ø 4 mm Slotted flat Ø 5.5 mm
Contacts Material	Silver alloy (Ag/Ni)
Short-Circuit Protection	10 A cartridge fuse gG IEC 60947-5-1
[Ith] Conventional Free Air Thermal Current	10 A IEC 60947-5-1
[Ui] Rated Insulation Voltage	600 V 3)IEC 60947-1
[Uimp] Rated Impulse Withstand Voltage	6 kV IEC 60947-1
[Ie] Rated Operational Current	3 A 240 V, AC-15, A600 IEC 60947-5-1 6 A 120 V, AC-15, A600 IEC 60947-5-1 0.1 A 600 V, DC-13, Q600 IEC 60947-5-1 0.27 A 250 V, DC-13, Q600 IEC 60947-5-1 0.55 A 125 V, DC-13, Q600 IEC 60947-5-1 1.2 A 600 V, AC-15, A600 IEC 60947-5-1
Electrical Durability	1000000 cycles, AC-15, 2 A 230 V 3600 cyc/h 0.5 IEC 60947-5-1 appendix C 1000000 cycles, AC-15, 3 A 120 V 3600 cyc/h 0.5 IEC 60947-5-1 appendix C 1000000 cycles, AC-15, 4 A 24 V 3600 cyc/h 0.5 IEC 60947-5-1 appendix C 1000000 cycles, DC-13, 0.2 A 110 V 3600 cyc/h 0.5 IEC 60947-5-1 appendix C 1000000 cycles, DC-13, 0.5 A 24 V 3600 cyc/h 0.5 IEC 60947-5-1 appendix C
Electrical Reliability	Λ < 10exp(-6) 5 V, 1 mA in clean environment IEC 60947-5-4 Λ < 10exp(-8) 17 V, 5 mA in clean environment IEC 60947-5-4
Signalling Type	Steady
Device Presentation	Complete product

Environment

Protective Treatment	TH
Ambient Air Temperature For Storage	-40…158 °F (-40…70 °C)
Ambient Air Temperature For Operation	-40…131 °F (-40…55 °C)
Overvoltage Category	Class II IEC 60536
Ip Degree Of Protection	IP66 IEC 60529 IP69 IP69K IP67
Nema Degree Of Protection	NEMA 13 NEMA 4X
Ik Degree Of Protection	IK05 conforming to IEC 50102
Standards	UL 508 IEC 60947-5-4 IEC 60947-5-1 JIS C8201-5-1 IEC 60947-1 CSA C22.2 No 14 JIS C8201-1

Product Certifications	UL Listed BV GL LROS (Lloyds register of shipping) DNV CSA
Vibration Resistance	5 gn 2…500 Hz)IEC 60068-2-6
Shock Resistance	30 gn 18 ms) half sine wave acceleration IEC 60068-2-27 50 gn 11 ms) half sine wave acceleration IEC 60068-2-27

Ordering and shipping details

Category	US10CS222467
Discount Schedule	0CS2
Gtin	3389110904055
Returnability	Yes
Country Of Origin	MX

Packing Units

Unit Type Of Package 1	PCE
Number Of Units In Package 1	1
Package 1 Height	1.38 in (3.500 cm)
Package 1 Width	2.17 in (5.500 cm)
Package 1 Length	3.35 in (8.500 cm)
Package 1 Weight	1.94 oz (55.000 g)
Unit Type Of Package 2	S02
Number Of Units In Package 2	55
Package 2 Height	5.91 in (15.000 cm)
Package 2 Width	11.81 in (30.000 cm)
Package 2 Length	15.75 in (40.000 cm)
Package 2 Weight	7.24 lb(US) (3.286 kg)
Unit Type Of Package 3	P06
Number Of Units In Package 3	880
Package 3 Height	29.53 in (75.000 cm)
Package 3 Width	31.50 in (80.000 cm)
Package 3 Length	23.62 in (60.000 cm)
Package 3 Weight	133.55 lb(US) (60.576 kg)

Contractual warranty

Warranty	18 months

Sustainability

Green Premium™ label is Schneider Electric's commitment to delivering products with best-in-class environmental performance. Green Premium promises compliance with the latest regulations, transparency on environmental impacts, as well as circular and low-CO_2 products.

Guide to assessing product sustainability is a white paper that clarifies global eco-label standards and how to interpret environmental declarations.

Learn more about Green Premium >

Guide to assess a product's sustainability >

Transparency RoHS/REACh

Well-being performance

Mercury Free

Rohs Exemption Information	Yes

Certifications & Standards

Reach Regulation	REACh Declaration
Eu Rohs Directive	Pro-active compliance (Product out of EU RoHS legal scope)
China Rohs Regulation	China RoHS declaration
Environmental Disclosure	Product Environmental Profile
Weee	The product must be disposed on European Union markets following specific waste collection and never end up in rubbish bins.
Circularity Profile	End of Life Information
California Proposition 65	WARNING: This product can expose you to chemicals including: Lead and lead compounds, which is known to the State of California to cause cancer and birth defects or other reproductive harm. For more information go to www.P65Warnings.ca.gov

Dimensions Drawings

Dimensions

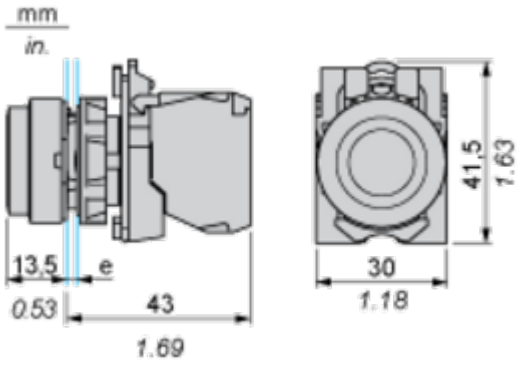

e: clamping thickness: 1 to 6 mm / 0.04 to 0.24 in.

Mounting and Clearance

Panel Cut-out for Pushbuttons, Switches and Pilot Lights (Finished Holes, Ready for Installation)

Connection by Screw Clamp Terminals or Plug-in Connectors or on Printed Circuit Board

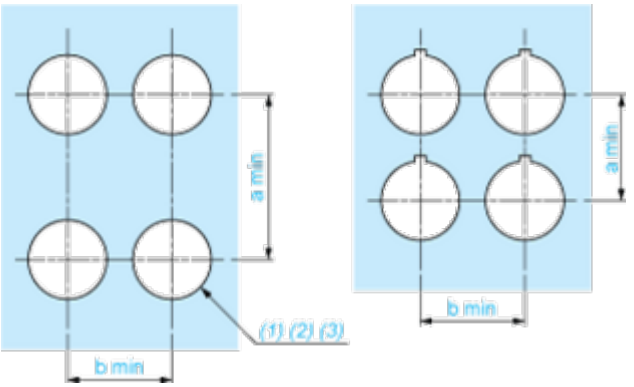

(1) Diameter on finished panel or support
(2) For selector switches and Emergency stop buttons, use of an anti-rotation plate type ZB5AZ902 is recommended.
(3) Ø22.5 mm recommended (Ø22.3 $_{0}^{+0.4}$) / Ø0.89 in. recommended (Ø0.88 in. $_{0}^{+0.016}$)

Connections	a in mm	a in in.	b in mm	b in in.
By screw clamp terminals or plug-in connector	40	1.57	30	1.18
By Faston connectors	45	1.77	32	1.26
On printed circuit board	30	1.18	30	1.18

Detail of Lug Recess

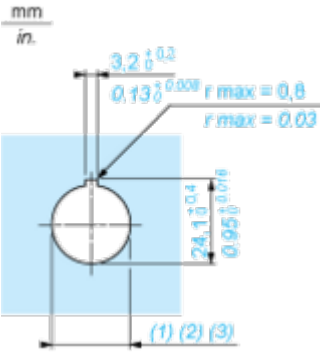

(1) Diameter on finished panel or support
(2) For selector switches and Emergency stop buttons, use of an anti-rotation plate type ZB5AZ902 is recommended.
(3) Ø22.5 mm recommended (Ø22.3 $_{0}^{+0.4}$) / Ø0.89 in. recommended (Ø0.88 in. $_{0}^{+0.016}$)