Product data sheet

Specifications

Pilot light, Harmony XB5, plastic, orange, 22mm, plain lens for BA9s bulb, lt 250V

XB5AV65

Product availability: Non-Stock - Not normally stocked in distribution facility

Price*: 51.00 USD

Main

Range Of Product	Harmony XB5
Product Or Component Type	Pilot light
Device Short Name	XB5
Bezel Material	Dark grey plastic
Fixing Collar Material	Plastic
Head Type	Standard
Mounting Diameter	0.89 in (22.5 mm)
Sale Per Indivisible Quantity	1
Shape Of Signaling Unit Head	Round
Cap/Operator Or Lens Colour	Orange
Operator Additional Information	With plain lens
Light Source	Bulb not included
Bulb Base	BA 9s
Light Block Supply	Direct <2.4 W
Light Source Colour	Orange
[Us] Rated Supply Voltage	<= 250 V
[Us] Rated Supply Voltage	<= 250 V

Complementary

Height	1.65 in (42 mm)
Width	1.18 in (30 mm)
Depth	2.17 in (55 mm)
Terminals Description Iso N°1	(X1-X2)PL
Net Weight	0.08 lb(US) (0.037 kg)
Resistance To High Pressure Washer	1015.26 psi (7000000 Pa) 131 °F (55 °C) 0.1 m
Connections - Terminals	Screw clamp terminals, <= 2 x 1.5 mm² with cable end IEC 60947-1 Screw clamp terminals, 1 x 0.22...2 x 2.5 mm² without cable end IEC 60947-1
[Ui] Rated Insulation Voltage	250 V 3)IEC 60947-1
[Uimp] Rated Impulse Withstand Voltage	4 kV IEC 60947-1
Signalling Type	Steady

Price is “List Price” and may be subject to a trade discount – check with your local distributor or retailer for actual price.

Disclaimer: This documentation is not intended as a substitute for and is not to be used for determining suitability or reliability of these products for specific user applications

Device Presentation	Complete product

Environment

Protective Treatment	TH
Ambient Air Temperature For Storage	-40…158 °F (-40…70 °C)
Ambient Air Temperature For Operation	-40…131 °F (-40…55 °C)
Electrical Shock Protection Class	Class II IEC 60536
Overvoltage Category	Class II IEC 60536
Ip Degree Of Protection	IP66 IEC 60529 IP67 IEC 60529 IP69 IEC 60529 IP69K ISO 20653
Nema Degree Of Protection	NEMA 13 NEMA 4X
Ik Degree Of Protection	IK05 conforming to IEC 50102
Standards	UL 508 CSA C22.2 No 14 JIS C8201-5-1 IEC 60947-5-1 IEC 60947-5-4 IEC 60947-1 JIS C8201-1
Product Certifications	UL Listed CSA
Vibration Resistance	5 gn 12…500 Hz)IEC 60068-2-6
Shock Resistance	30 gn 18 ms) half sine wave acceleration IEC 60068-2-27 50 gn 11 ms) half sine wave acceleration IEC 60068-2-27

Ordering and shipping details

Category	US10CS222467
Discount Schedule	0CS2
Gtin	3389110903997
Returnability	Yes
Country Of Origin	MX

Packing Units

Unit Type Of Package 1	PCE
Number Of Units In Package 1	1
Package 1 Height	1.34 in (3.400 cm)
Package 1 Width	2.13 in (5.400 cm)
Package 1 Length	3.46 in (8.800 cm)
Package 1 Weight	1.16 oz (33.000 g)
Unit Type Of Package 2	S03
Number Of Units In Package 2	150
Package 2 Height	11.81 in (30.000 cm)
Package 2 Width	11.81 in (30.000 cm)
Package 2 Length	15.75 in (40.000 cm)

Package 2 Weight	12.84 lb(US) (5.825 kg)
Unit Type Of Package 3	P06
Number Of Units In Package 3	1200
Package 3 Height	31.50 in (80.000 cm)
Package 3 Width	31.50 in (80.000 cm)
Package 3 Length	23.62 in (60.000 cm)
Package 3 Weight	121.26 lb(US) (55.004 kg)

Contractual warranty

Warranty	18 months

Sustainability

Green Premium™ label is Schneider Electric's commitment to delivering products with best-in-class environmental performance. Green Premium promises compliance with the latest regulations, transparency on environmental impacts, as well as circular and low-CO_2 products.

Guide to assessing product sustainability is a white paper that clarifies global eco-label standards and how to interpret environmental declarations.

Learn more about Green Premium >

Guide to assess a product's sustainability >

Transparency RoHS/REACh

Well-being performance

Mercury Free

Rohs Exemption Information	Yes

Certifications & Standards

Reach Regulation	REACh Declaration
Eu Rohs Directive	Pro-active compliance (Product out of EU RoHS legal scope)
China Rohs Regulation	China RoHS declaration
Environmental Disclosure	Product Environmental Profile
Weee	The product must be disposed on European Union markets following specific waste collection and never end up in rubbish bins.
Circularity Profile	End of Life Information
California Proposition 65	WARNING: This product can expose you to chemicals including: Lead and lead compounds, which is known to the State of California to cause cancer and birth defects or other reproductive harm. For more information go to www.P65Warnings.ca.gov

Dimensions Drawings

Dimensions

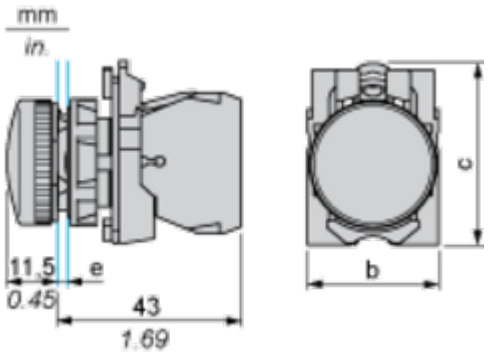

e: clamping thickness: 1 to 6 mm / 0.04 to 0.24 in.
b: 30 mm / 1.18 in.
c: 41.5 mm / 1.63 in.

Mounting and Clearance

Panel Cut-out for Pushbuttons, Switches and Pilot Lights (Finished Holes, Ready for Installation)

Connection by Screw Clamp Terminals or Plug-in Connectors or on Printed Circuit Board

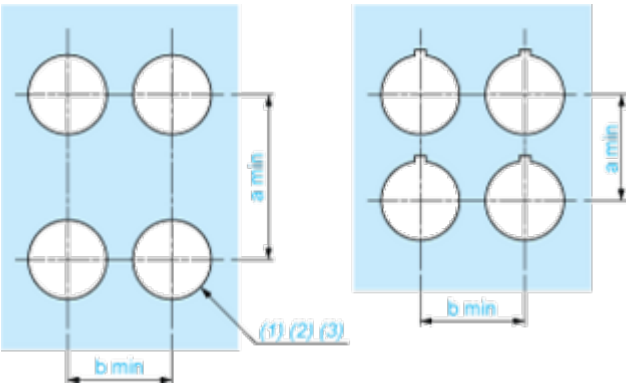

(1) Diameter on finished panel or support
(2) For selector switches and Emergency stop buttons, use of an anti-rotation plate type ZB5AZ902 is recommended.
(3) Ø22.5 mm recommended (Ø22.3 $_{0}^{+0.4}$) / Ø0.89 in. recommended (Ø0.88 in. $_{0}^{+0.016}$)

Connections	a in mm	a in in.	b in mm	b in in.
By screw clamp terminals or plug-in connector	40	1.57	30	1.18
By Faston connectors	45	1.77	32	1.26
On printed circuit board	30	1.18	30	1.18

Detail of Lug Recess

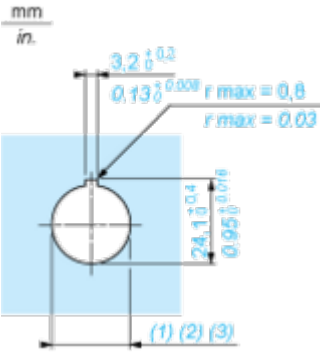

(1) Diameter on finished panel or support
(2) For selector switches and Emergency stop buttons, use of an anti-rotation plate type ZB5AZ902 is recommended.
(3) Ø22.5 mm recommended (Ø22.3 $_{0}^{+0.4}$) / Ø0.89 in. recommended (Ø0.88 in. $_{0}^{+0.016}$)