Product data sheet

Specifications

Illuminated double headed push button, Harmony XB4, metal, 22mm, 1 green flush I + 1 pilot light + 1 red projecting O, 1 NO + 1 NC

XB4BW73731B5

Product availability: Stock - Normally stocked in distribution facility
Important message: Viktig information: en förändring i utseendet kan observeras på produkten, men detta påverkar inte dess användning i termer av funktion och säkerhet. Detta gör den kompatibel med våra Universal LED-block

Price*: 130.00 USD

Main

Range Of Product	Harmony XB4
Product Or Component Type	Illuminated double-headed push-button
Device Short Name	XB4
Bezel Material	Chromium plated metal
Head Type	Standard
Mounting Diameter	0.89 in (22.5 mm)
Colour Of Marking	White marking when green, red or black caps Black marking when white caps
Light Source	Protected LED
Light Source Colour	White
Device Presentation	Complete product

Complementary

Fixing Collar Material	Zamak
Net Weight	0.29 lb(US) (0.13 kg)
Resistance To High Pressure Washer	1015.26 psi (7000000 Pa) 131 °F (55 °C) 0.1 m
Shape Of Signaling Unit Head	Rectangular
Type Of Operator	spring return
Operator Profile	1 flush - 1 projecting push-buttons - 1 central pilot light
Operators Description	Green "I" - red "O"
Operator Profile	Green flush, I white) Red projecting, O white)
Contacts Type And Composition	1 NO + 1 NC
Contact Operation	Slow-break
Contacts Usage	Standard contacts
Positive Opening	With IEC 60947-5-1 appendix K

Price is “List Price” and may be subject to a trade discount – check with your local distributor or retailer for actual price.

Disclaimer: This documentation is not intended as a substitute for and is not to be used for determining suitability or reliability of these products for specific user applications

Operating Travel	0.06 in (1.5 mm) NC changing electrical state) 0.10 in (2.6 mm) NO changing electrical state) 0.17 in (4.3 mm) total travel)
Operating Force	3.5 N NC changing electrical state 3.8 N NO changing electrical state
Mechanical Durability	1000000 cycles
Connections - Terminals	Screw clamp terminals, <= 2 x 1.5 mm² with cable end IEC 60947-1 Screw clamp terminals, >= 1 x 0.22 mm² without cable end IEC 60947-1
Tightening Torque	7.08…10.62 lbf.in (0.8…1.2 N.m) IEC 60947-1
Shape Of Screw Head	Cross JIS No 1 Cross Philips no 1 Cross pozidriv No 1 Slotted flat Ø 4 mm Slotted flat Ø 5.5 mm
Contacts Material	Silver alloy (Ag/Ni)
Short-Circuit Protection	10 A cartridge fuse gG IEC 60947-5-1
[Ith] Conventional Free Air Thermal Current	10 A IEC 60947-5-1
[Ui] Rated Insulation Voltage	600 V 3)IEC 60947-1
[Uimp] Rated Impulse Withstand Voltage	6 kV IEC 60947-1
[Ie] Rated Operational Current	3 A 240 V, AC-15, A600 IEC 60947-5-1 6 A 120 V, AC-15, A600 IEC 60947-5-1 0.1 A 600 V, DC-13, Q600 IEC 60947-5-1 0.27 A 250 V, DC-13, Q600 IEC 60947-5-1 0.55 A 125 V, DC-13, Q600 IEC 60947-5-1 1.2 A 600 V, AC-15, A600 IEC 60947-5-1
Electrical Durability	1000000 cycles, AC-15, 2 A 230 V 3600 cyc/h 0.5 IEC 60947-5-1 appendix C 1000000 cycles, AC-15, 3 A 120 V 3600 cyc/h 0.5 IEC 60947-5-1 appendix C 1000000 cycles, AC-15, 4 A 24 V 3600 cyc/h 0.5 IEC 60947-5-1 appendix C 1000000 cycles, DC-13, 0.2 A 110 V 3600 cyc/h 0.5 IEC 60947-5-1 appendix C 1000000 cycles, DC-13, 0.5 A 24 V 3600 cyc/h 0.5 IEC 60947-5-1 appendix C
Electrical Reliability	Λ < 10exp(-6) 5 V 1 mA in clean environment IEC 60947-5-4 Λ < 10exp(-8) 17 V 5 mA in clean environment IEC 60947-5-4
Signalling Type	Steady
Bulb Base	Integral LED
[Us] Rated Supply Voltage	24 V AC/DC 50/60 Hz
Supply Voltage Limits	19.2…30 V DC 21.6…26.4 V AC
Current Consumption	18 mA
Service Life	100000 h at rated voltage and 25 °C
Surge Withstand	1 kV IEC 61000-4-5
Compatibility Code	XB4

Environment

Protective Treatment	TH
Ambient Air Temperature For Storage	-40…158 °F (-40…70 °C)
Ambient Air Temperature For Operation	-40…158 °F (-40…70 °C)
Electrical Shock Protection Class	Class I IEC 60536
Ip Degree Of Protection	IP66 IEC 60529 IP69K IEC 60529 IP69 IEC 60529

Nema Degree Of Protection	NEMA 13 NEMA 4X
Ik Degree Of Protection	IK06 conforming to IEC 50102
Standards	IEC 60947-1 IEC 60947-5-1 CSA C22.2 No 14 JIS C8201-5-1 IEC 60947-5-5 IEC 60947-5-4 UL 508 JIS C8201-1
Product Certifications	DNV LROS (Lloyds register of shipping) CSA BV UL Listed GL
Vibration Resistance	5 gn 2…500 Hz)IEC 60068-2-6
Shock Resistance	30 gn 18 ms) half sine wave acceleration IEC 60068-2-27 50 gn 11 ms) half sine wave acceleration IEC 60068-2-27
Resistance To Fast Transients	2 kV IEC 61000-4-4
Resistance To Electromagnetic Fields	9.14 V/m (10 V/m) IEC 61000-4-3
Resistance To Electrostatic Discharge	6 kV on contact (on metal parts) IEC 61000-4-2 8 kV in free air (in insulating parts) IEC 61000-4-2
Electromagnetic Emission	Class B IEC 55011

Ordering and shipping details

Category	US10CS222468
Discount Schedule	0CS2
Gtin	3389119043601
Returnability	Yes
Country Of Origin	FR

Packing Units

Unit Type Of Package 1	PCE
Number Of Units In Package 1	1
Package 1 Height	1.38 in (3.500 cm)
Package 1 Width	2.17 in (5.500 cm)
Package 1 Length	3.54 in (9.000 cm)
Package 1 Weight	4.40 oz (124.800 g)
Unit Type Of Package 2	S03
Number Of Units In Package 2	100
Package 2 Height	11.81 in (30.000 cm)
Package 2 Width	11.81 in (30.000 cm)
Package 2 Length	15.75 in (40.000 cm)
Package 2 Weight	28.45 lb(US) (12.905 kg)
Unit Type Of Package 3	P06
Number Of Units In Package 3	800

Package 3 Height	29.53 in (75.000 cm)
Package 3 Width	31.50 in (80.000 cm)
Package 3 Length	23.62 in (60.000 cm)
Package 3 Weight	245.24 lb(US) (111.240 kg)

Contractual warranty

Warranty	18 months

Sustainability

Green Premium™ label is Schneider Electric's commitment to delivering products with best-in-class environmental performance. Green Premium promises compliance with the latest regulations, transparency on environmental impacts, as well as circular and low-CO_2 products.

Guide to assessing product sustainability is a white paper that clarifies global eco-label standards and how to interpret environmental declarations.

Learn more about Green Premium >

Guide to assess a product's sustainability >

Transparency RoHS/REACh

Well-being performance

Mercury Free

Rohs Exemption Information	Yes

Certifications & Standards

Reach Regulation	REACh Declaration
Eu Rohs Directive	Pro-active compliance (Product out of EU RoHS legal scope)
China Rohs Regulation	China RoHS declaration
Environmental Disclosure	Product Environmental Profile
Weee	The product must be disposed on European Union markets following specific waste collection and never end up in rubbish bins.
Circularity Profile	End of Life Information
California Proposition 65	WARNING: This product can expose you to chemicals including: Lead and lead compounds, which is known to the State of California to cause cancer and birth defects or other reproductive harm. For more information go to www.P65Warnings.ca.gov

Dimensions Drawings

Dimensions

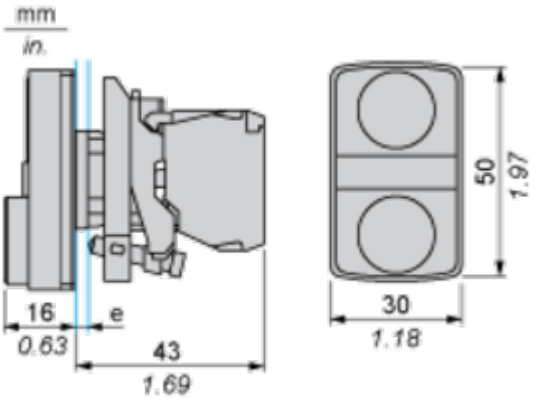

Mounting and Clearance

Panel Cut-out for Pushbuttons, Switches and Pilot Lights (Finished Holes, Ready for Installation)

Connection by Screw Clamp Terminals or Plug-in Connectors or on Printed Circuit Board	Connection by Faston Connectors
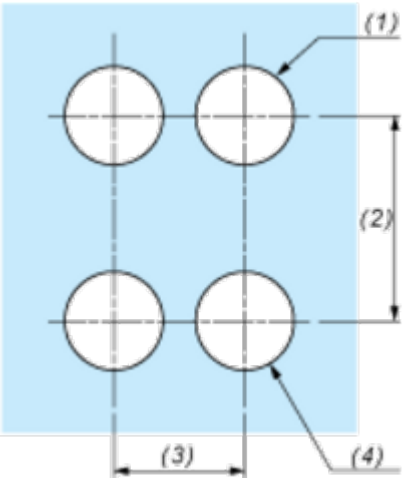	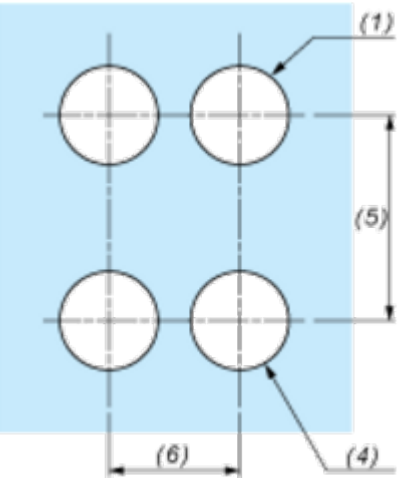

(1) Diameter on finished panel or support
(2) 40 mm min. / 1.57 in. min.
(3) 30 mm min. / 1.18 in. min.
(4) Ø 22.5 mm / 0.89 in. recommended (Ø 22.3 mm $_{0}^{+0.4}$ / 0.88 in. $_{0}^{+0.016}$)
(5) 45 mm min. / 1.78 in. min.
(6) 32 mm min. / 1.26 in. min.

Pushbuttons, Switches and Pilot Lights for Printed Circuit Board Connection

Panel Cut-outs (Viewed from Installer's Side)

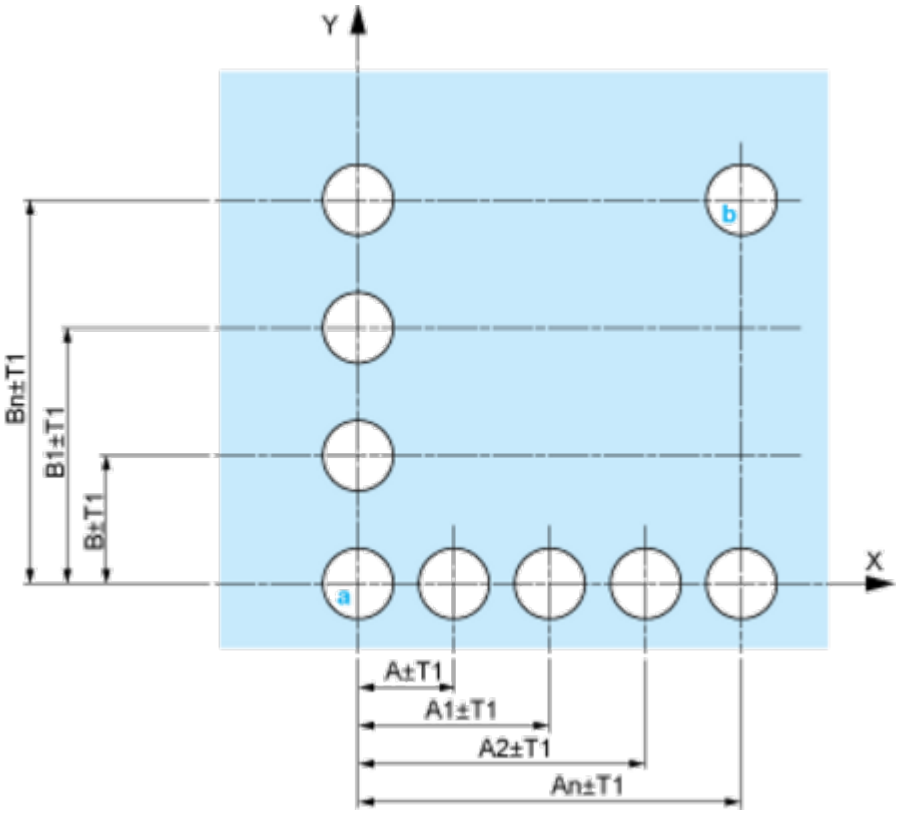

A: 30 mm min. / 1.18 in. min.
B: 40 mm min. / 1.57 in. min.

Printed Circuit Board Cut-outs (Viewed from Electrical Block Side)

Dimensions in mm

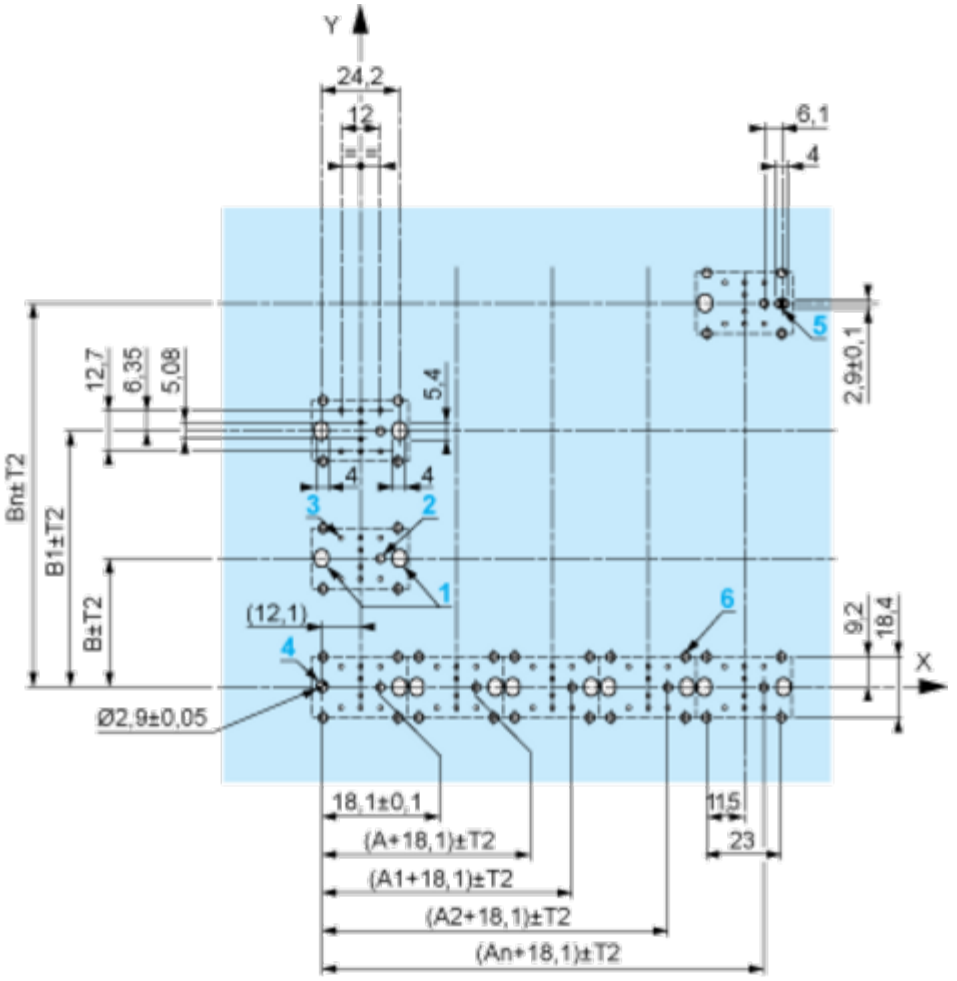

A: 30 mm min.
B: 40 mm min.
Dimensions in in.

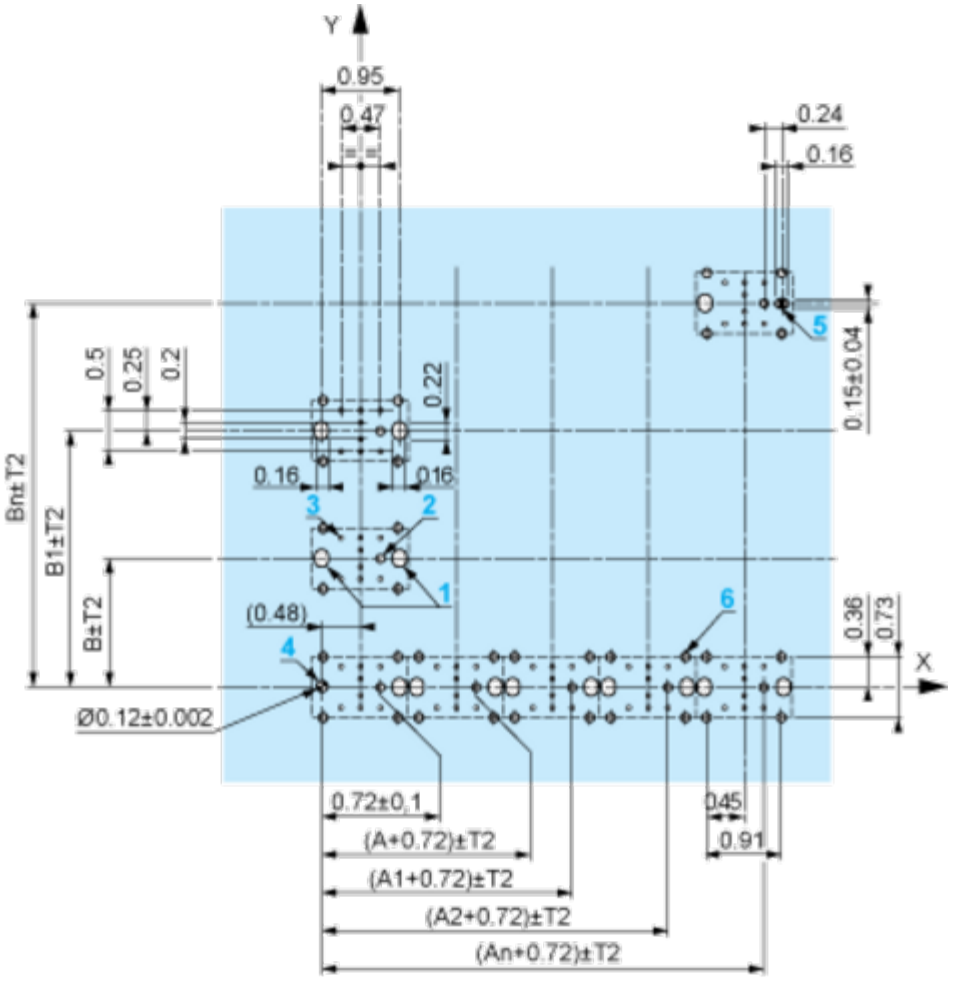

A: 1.18 in. min.
B: 1.57 in. min.

General Tolerances of the Panel and Printed Circuit Board

The cumulative tolerance must not exceed 0.3 mm / 0.012 in: T1 + T2 = 0.3 mm max.

Installation Precautions

- Minimum thickness of circuit board: 1.6 mm / 0.06 in.
- Cut-out diameter: 22.4 mm ± 0.1 / 0.88 in. ± 0.004
- Orientation of body/fixing collar ZB4 BZ009: ± 2°30' (excluding cut-outs marked **a** and **b**).
- Tightening torque of screws ZBZ 006: 0.6 N.m (5.3 lbf.in) max.
- Allow for one ZB4 BZ079 fixing collar/pillar and its fixing screws:
  - every 90 mm / 3.54 in. horizontally (X), and 120 mm / 4.72 in. vertically (Y).
  - with each selector switch head (ZB4 BD•, ZB4 BJ•, ZB4 BG•).

The fixing centers marked **a** and **b** are diagonally opposed and must align with those marked **4** and **5**.

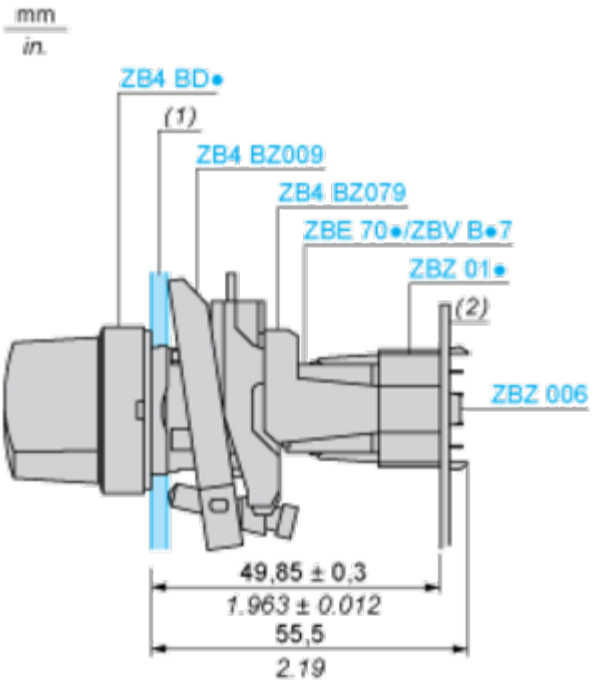

(1) Panel
(2) Printed circuit board

Mounting of Adapter (Socket) ZBZ 01•

- **1** 2 elongated holes for ZBZ 006 screw access
- **2** 1 hole Ø 2.4 mm ± 0.05 / 0.09 in. ± 0.002 for centring adapter ZBZ 01•
- **3** 8 × Ø 1.2 mm / 0.05 in. holes
- **4** 1 hole Ø 2.9 mm ± 0.05 / 0.11 in. ± 0.002, for aligning the printed circuit board (with cut-out marked **a**)
- **5** 1 elongated hole for aligning the printed circuit board (with cut-out marked **b**)
- **6** 4 holes Ø 2.4 mm / 0.09 in. for clipping in adapter ZBZ 01•

Dimensions An + 18.1 relate to the Ø 2.4 mm ± 0.05 / 0.09 in. ± 0.002 holes for centring adapter ZBZ 01•.