Product data sheet

Specifications

Emergency stop push button, Harmony XB4, metal, red mushroom 40mm, 22mm, trigger latching key release, 1NC

XB4BS9442

Product availability: Stock - Normally stocked in distribution facility

Price*: 189.00 USD

Main

Range Of Product	Harmony XB4
Product Or Component Type	Emergency stop push-button Emergency switching off push-button
Device Short Name	XB4
Bezel Material	Chromium plated metal
Fixing Collar Material	Zamak
Mounting Diameter	0.89 in (22.5 mm)
Sale Per Indivisible Quantity	1
Shape Of Signaling Unit Head	Round
Type Of Operator	trigger action and mechanical latching
Head Type	Standard
Reset	Key release
Operator Profile	Red mushroom Ø 40 mm, unmarked
Type Of Keylock	Key 455
Key Withdrawal Position	Center
Contact Operation	Slow-break
Connections - Terminals	Screw clamp terminals, <= 2 x 1.5 mm² with cable end IEC 60947-1 Screw clamp terminals, >= 1 x 0.22 mm² without cable end IEC 60947-1

Complementary

Height	1.85 in (47 mm)
Width	1.57 in (40 mm)
Depth	4.09 in (104 mm)
Terminals Description Iso N°1	(21-22)NC
Net Weight	0.29 lb(US) (0.133 kg)
Resistance To High Pressure Washer	1015.26 psi (7000000 Pa) 131 °F (55 °C) 0.1 m
Contacts Usage	Standard contacts
Positive Opening	With IEC 60947-5-1 appendix K
Operating Travel	0.06 in (1.5 mm) NC changing electrical state) 0.17 in (4.3 mm) total travel)

Price is “List Price” and may be subject to a trade discount – check with your local distributor or retailer for actual price.

Disclaimer: This documentation is not intended as a substitute for and is not to be used for determining suitability or reliability of these products for specific user applications

Mechanical Durability	300000 cycles
Tightening Torque	7.08…10.62 lbf.in (0.8…1.2 N.m) IEC 60947-1
Shape Of Screw Head	Cross Philips no 1 Cross pozidriv No 1 Slotted flat Ø 4 mm Slotted flat Ø 5.5 mm
Contacts Material	Silver alloy (Ag/Ni)
Short-Circuit Protection	10 A cartridge fuse gG IEC 60947-5-1
[Ith] Conventional Free Air Thermal Current	10 A IEC 60947-5-1
[Ui] Rated Insulation Voltage	600 V 3)IEC 60947-1
[Uimp] Rated Impulse Withstand Voltage	6 kV IEC 60947-1
[Ie] Rated Operational Current	3 A 240 V, AC-15, A600 IEC 60947-5-1 6 A 120 V, AC-15, A600 IEC 60947-5-1 0.1 A 600 V, DC-13, Q600 IEC 60947-5-1 0.27 A 250 V, DC-13, Q600 IEC 60947-5-1 0.55 A 125 V, DC-13, Q600 IEC 60947-5-1 1.2 A 600 V, AC-15, A600 IEC 60947-5-1
Electrical Durability	1000000 cycles, AC-15, 2 A 230 V 3600 cyc/h 0.5 IEC 60947-5-1 appendix C 1000000 cycles, AC-15, 3 A 120 V 3600 cyc/h 0.5 IEC 60947-5-1 appendix C 1000000 cycles, AC-15, 4 A 24 V 3600 cyc/h 0.5 IEC 60947-5-1 appendix C 1000000 cycles, DC-13, 0.2 A 110 V 3600 cyc/h 0.5 IEC 60947-5-1 appendix C 1000000 cycles, DC-13, 0.5 A 24 V 3600 cyc/h 0.5 IEC 60947-5-1 appendix C
Electrical Reliability	Λ < 10exp(-6) 5 V 1 mA in clean environment IEC 60947-5-4 Λ < 10exp(-8) 17 V 5 mA in clean environment IEC 60947-5-4
Device Presentation	Complete product

Environment

Protective Treatment	TH
Ambient Air Temperature For Storage	-40…158 °F (-40…70 °C)
Ambient Air Temperature For Operation	-40…158 °F (-40…70 °C)
Electrical Shock Protection Class	Class I IEC 60536
Ip Degree Of Protection	IP66 IEC 60529 IP67 IP69 IP69K
Nema Degree Of Protection	NEMA 13 NEMA 4X
Ik Degree Of Protection	IK03 conforming to IEC 50102
Standards	IEC 60947-1 IEC 60947-5-5 JIS C8201-5-1 IEC 60947-5-4 IEC 60364-5-53 IEC 60204-1 UL 508 IEC 60947-5-1 CSA C22.2 No 14 ISO 13850 JIS C8201-1
Product Certifications	CSA LROS (Lloyds register of shipping) DNV BV UL Listed GL
Vibration Resistance	5 gn 2…500 Hz)IEC 60068-2-6

Shock Resistance	30 gn 18 ms) half sine wave acceleration IEC 60068-2-27 50 gn 11 ms) half sine wave acceleration IEC 60068-2-27

Ordering and shipping details

Category	US10CS222468
Discount Schedule	0CS2
Gtin	3606480623721
Returnability	Yes
Country Of Origin	US

Packing Units

Unit Type Of Package 1	PCE
Number Of Units In Package 1	1
Package 1 Height	3.54 in (9.000 cm)
Package 1 Width	2.09 in (5.300 cm)
Package 1 Length	1.69 in (4.300 cm)
Package 1 Weight	5.33 oz (151.000 g)
Unit Type Of Package 2	S03
Number Of Units In Package 2	80
Package 2 Height	11.81 in (30.000 cm)
Package 2 Width	11.81 in (30.000 cm)
Package 2 Length	15.75 in (40.000 cm)
Package 2 Weight	27.72 lb(US) (12.572 kg)
Unit Type Of Package 3	P06
Number Of Units In Package 3	640
Package 3 Height	29.53 in (75.000 cm)
Package 3 Width	23.62 in (60.000 cm)
Package 3 Length	31.50 in (80.000 cm)
Package 3 Weight	242.96 lb(US) (110.204 kg)

Sustainability

Green Premium™ label is Schneider Electric's commitment to delivering products with best-in-class environmental performance. Green Premium promises compliance with the latest regulations, transparency on environmental impacts, as well as circular and low-CO_2 products.

Guide to assessing product sustainability is a white paper that clarifies global eco-label standards and how to interpret environmental declarations.

Learn more about Green Premium >

Guide to assess a product's sustainability >

Transparency RoHS/REACh

Well-being performance

Mercury Free

Rohs Exemption Information	Yes

Certifications & Standards

Reach Regulation	REACh Declaration
Eu Rohs Directive	Pro-active compliance (Product out of EU RoHS legal scope)
China Rohs Regulation	China RoHS declaration
Environmental Disclosure	Product Environmental Profile
Weee	The product must be disposed on European Union markets following specific waste collection and never end up in rubbish bins.
Circularity Profile	End of Life Information
California Proposition 65	WARNING: This product can expose you to chemicals including: Lead and lead compounds, which is known to the State of California to cause cancer and birth defects or other reproductive harm. For more information go to www.P65Warnings.ca.gov

Dimensions Drawings

Dimensions

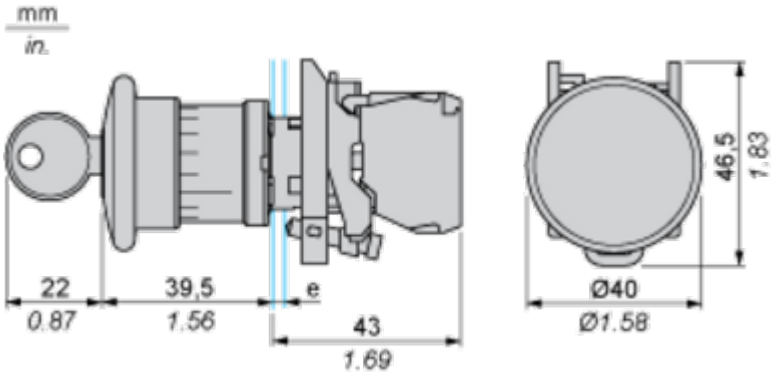

e : clamping thickness: 1 to 6 mm / 0.04 to 0.24 in.

Mounting and Clearance

Panel Cut-out for Pushbuttons, Switches and Pilot Lights (Finished Holes, Ready for Installation)

Connection by Screw Clamp Terminals or Plug-in Connectors or on Printed Circuit Board	Connection by Faston Connectors
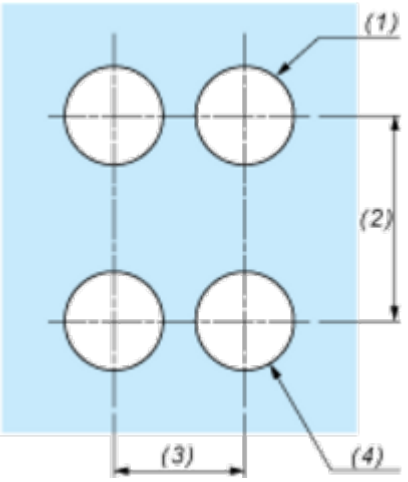	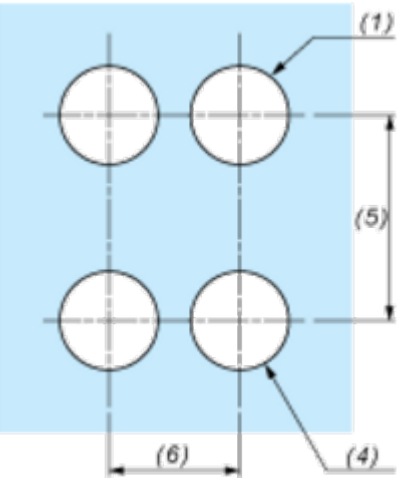

(1) Diameter on finished panel or support
(2) 40 mm min. / 1.57 in. min.
(3) 30 mm min. / 1.18 in. min.
(4) Ø 22.5 mm / 0.89 in. recommended (Ø 22.3 mm $_{0}^{+0.4}$ / 0.88 in. $_{0}^{+0.016}$)
(5) 45 mm min. / 1.78 in. min.
(6) 32 mm min. / 1.26 in. min.