Product data sheet

Specifications

Green Premium™

vandal resistant surface mounted control station - XAP-S - lock and 2 buttons

XAPS21111

Discontinued on: Oct 20, 2020

Discontinued

Main

Range Of Product	Harmony XAPS
Product Or Component Type	Key operated control station
Device Short Name	XAPS
Product Mounting	Surface mounted
Control Station Composition	1 key selector switch, stay put 1 NO O-I 1 push-button, spring return 1 NO down arrow 1 push-button, spring return 1 NO up arrow
Operator Position Information	2 positions
Key Withdrawal Position	Left-hand
Contact Operation	Slow-break

Complementary

Cable Entry	1 tapped entry for cable gland 0.47 in (12 mm)
Net Weight	2.38 lb(US) (1.08 kg)
Connections - Terminals	Screw clamp terminals, <= 2 x 1.5 mm² with cable end EN/IEC 60947-1 Screw clamp terminals, >= 1 x 0.22 mm² without cable end EN/IEC 60947-1
Tightening Torque	7.08…10.62 lbf.in (0.8…1.2 N.m) EN/IEC 60947-1
Shape Of Screw Head	Cross Philips no 1 Cross pozidriv No 1 Slotted flat Ø 4 mm Slotted flat Ø 5.5 mm
Contacts Material	Silver alloy (Ag/Ni)
Maximum Resistance Across Terminals	25 MOhm
Short-Circuit Protection	10 A cartridge fuse gG IEC 60947-5-1
[Ith] Conventional Free Air Thermal Current	10 A IEC 60947-5-1
[Ui] Rated Insulation Voltage	600 V 3)IEC 60947-1
[Uimp] Rated Impulse Withstand Voltage	6 kV IEC 60947-1
[Ie] Rated Operational Current	3 A 240 V, AC-15, A600 IEC 60947-5-1 6 A 120 V, AC-15, A600 IEC 60947-5-1 0.1 A 600 V, DC-13, Q600 IEC 60947-5-1 0.27 A 250 V, DC-13, Q600 IEC 60947-5-1 0.55 A 125 V, DC-13, Q600 IEC 60947-5-1 1.2 A 600 V, AC-15, A600 IEC 60947-5-1
Compatibility Code	XAPS

Price is “List Price” and may be subject to a trade discount – check with your local distributor or retailer for actual price.

Disclaimer: This documentation is not intended as a substitute for and is not to be used for determining suitability or reliability of these products for specific user applications

Environment

Protective Treatment	TC
Ambient Air Temperature For Storage	-40…158 °F (-40…70 °C)
Ambient Air Temperature For Operation	-13…158 °F (-25…70 °C)
Electrical Shock Protection Class	Class I IEC 60536
Ip Degree Of Protection	IP54 IEC 60529
Ik Degree Of Protection	IK08 conforming to EN 50102
Standards	EN/IEC 60947-5-1

Ordering and shipping details

Category	18406-WORLD SERVICE PARTS(OTHER OP INT)
Discount Schedule	CS2
Gtin	3389110664539
Returnability	No

Contractual warranty

Warranty	18 months

Sustainability

Green Premium™ label is Schneider Electric's commitment to delivering products with best-in-class environmental performance. Green Premium promises compliance with the latest regulations, transparency on environmental impacts, as well as circular and low-CO_2 products.

Guide to assessing product sustainability is a white paper that clarifies global eco-label standards and how to interpret environmental declarations.

Learn more about Green Premium >

Guide to assess a product's sustainability >

Transparency RoHS/REACh

Well-being performance

Reach Free Of Svhc	
Toxic Heavy Metal Free	
Mercury Free	
Rohs Exemption Information	Yes

Certifications & Standards

Reach Regulation	REACh Declaration
Eu Rohs Directive	Pro-active compliance (Product out of EU RoHS legal scope) EU RoHS Declaration
China Rohs Regulation	China RoHS declaration
Environmental Disclosure	Product Environmental Profile
Circularity Profile	End of Life Information
California Proposition 65	WARNING: This product can expose you to chemicals including: Nickel compounds, which is known to the State of California to cause cancer, and Di-isodecyl phthalate (DIDP), which is known to the State of California to cause birth defects or other reproductive harm. For more information go to www.P65Warnings.ca.gov

Dimensions Drawings

Dimensions and Fixing

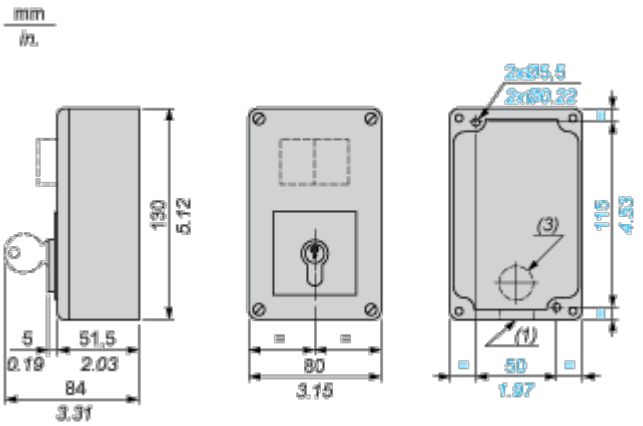

(1) 1 tapped entry for 12 mm/0.47 in. maximum capacity cable gland.

(3) Optional: cable entry through rear.