Product data sheet

Specifications

Green Premium™

Pendant control station, Harmony XAC, plastic, yellow, 4 push buttons with 2NO+1NC

XACA491

Discontinued

Main

Range Of Product	Harmony XAC
Product Or Component Type	Pendant control station
Device Short Name	XACA

Complementary

Control Station Type	Double insulated
Enclosure Material	Polypropylene
Electrical Circuit Type	Control circuit
Enclosure Type	Complete ready for use
Control Station Application	Control of 2-speed hoist motor
Control Station Composition	4 push-buttons
Control Button Type	First push-button 1 NC + 2 NO raise, slow-fast Second push-button 1 NC + 2 NO lower, slow-fast Fourth push-button 1 NC + 2 NO left, slow-fast Third push-button 1 NC + 2 NO right, slow-fast
Product Compatibility	XENG1191 for each direction
Mechanical Interlocking	With mechanical interlocking between pairs
Control Station Colour	Yellow
Connections - Terminals	Screw clamp terminals, 1 x 0.5...1 x 2.5 mm² without cable end Screw clamp terminals, 1 x 0.5...2 x 1.5 mm² with cable end
Standards	UL 508 EN/IEC 60204-32 EN/IEC 60947-5-1 CSA C22.2 No 14
Product Certifications	GOST CCC
Protective Treatment	TH
Ambient Air Temperature For Operation	-13…158 °F (-25…70 °C)
Ambient Air Temperature For Storage	-40…158 °F (-40…70 °C)
Vibration Resistance	15 gn 10…500 Hz)IEC 60068-2-6
Shock Resistance	100 gn IEC 60068-2-27
Overvoltage Category	Class II IEC 61140
Ip Degree Of Protection	IP65 conforming to IEC 60529
Ik Degree Of Protection	IK08 conforming to EN 50102

Price is “List Price” and may be subject to a trade discount – check with your local distributor or retailer for actual price.

Disclaimer: This documentation is not intended as a substitute for and is not to be used for determining suitability or reliability of these products for specific user applications

Mechanical Durability	1000000 cycles
Cable Entry	Rubber sleeve with stepped entry 0.31…1.02 in (8…26 mm)
Contact Code Designation	A600 AC-15, Ue = 240 V, Ie = 3 A IEC 60947-5-1 appendix A A600 AC-15, Ue = 600 V, Ie = 1.2 A IEC 60947-5-1 appendix A Q600 DC-13, Ue = 250 V, Ie = 0.27 A IEC 60947-5-1 appendix A Q600 DC-13, Ue = 600 V, Ie = 0.1 A IEC 60947-5-1 appendix A
[Ithe] Conventional Enclosed Thermal Current	10 A
[Ui] Rated Insulation Voltage	600 V 3)
[Uimp] Rated Impulse Withstand Voltage	6 kV IEC 60947-1
Contact Operation	Slow-break Staggered
Maximum Resistance Across Terminals	25 MOhm
Operating Force	18 N push-button
Short-Circuit Protection	10 A fuse protection cartridge gG
Rated Operational Power In W	40 W DC-13 1000000 cycles 60 cyc/mn 120 V 0.5 inductive IEC 60947-5-1 appendix C 48 W DC-13 1000000 cycles 60 cyc/mn 48 V 0.5 inductive IEC 60947-5-1 appendix C 65 W DC-13 1000000 cycles 60 cyc/mn 24 V 0.5 inductive IEC 60947-5-1 appendix C
Terminals Description Iso N°1	(21-22)NC (33-34)NO_CL (13-14)NO
Terminal Identifier	(13-14)NO (11-12)NC
Net Weight	1.38 lb(US) (0.625 kg)

Ordering and shipping details

Category	18407-WORLD SERVICE PARTS(SENSORS)
Discount Schedule	T
Gtin	3389110325768
Returnability	No
Country Of Origin	ES

Packing Units

Unit Type Of Package 1	PCE
Number Of Units In Package 1	1
Package 1 Height	3.35 in (8.500 cm)
Package 1 Width	3.54 in (9.000 cm)
Package 1 Length	17.52 in (44.500 cm)
Package 1 Weight	29.10 oz (825.000 g)
Unit Type Of Package 2	S04
Number Of Units In Package 2	12
Package 2 Height	11.81 in (30 cm)
Package 2 Width	15.75 in (40 cm)
Package 2 Length	23.62 in (60 cm)
Package 2 Weight	23.26 lb(US) (10.550 kg)

Unit Type Of Package 3	P06
Number Of Units In Package 3	48
Package 3 Height	29.53 in (75.000 cm)
Package 3 Width	31.50 in (80.000 cm)
Package 3 Length	23.62 in (60.000 cm)
Package 3 Weight	110.67 lb(US) (50.200 kg)

Contractual warranty

Warranty	18 months

Sustainability

Green Premium™ label is Schneider Electric's commitment to delivering products with best-in-class environmental performance. Green Premium promises compliance with the latest regulations, transparency on environmental impacts, as well as circular and low-CO_2 products.

Guide to assessing product sustainability is a white paper that clarifies global eco-label standards and how to interpret environmental declarations.

Learn more about Green Premium >

Guide to assess a product's sustainability >

Transparency RoHS/REACh

Well-being performance

Reach Free Of Svhc	
Toxic Heavy Metal Free	
Mercury Free	
Rohs Exemption Information	Yes

Certifications & Standards

Reach Regulation	REACh Declaration
Eu Rohs Directive	Pro-active compliance (Product out of EU RoHS legal scope) EU RoHS Declaration
China Rohs Regulation	China RoHS declaration
Environmental Disclosure	Product Environmental Profile
Weee	The product must be disposed on European Union markets following specific waste collection and never end up in rubbish bins.
Circularity Profile	No need of specific recycling operations
California Proposition 65	WARNING: This product can expose you to chemicals including: Nickel compounds, which is known to the State of California to cause cancer, and Di-isodecyl phthalate (DIDP), which is known to the State of California to cause birth defects or other reproductive harm. For more information go to www.P65Warnings.ca.gov

Dimensions Drawings

Dimensions

Below drawing shows a product with 6 cut-outs. Select the number of cut-outs according to the product characteristics in order to get b, b1 and c dimensions.

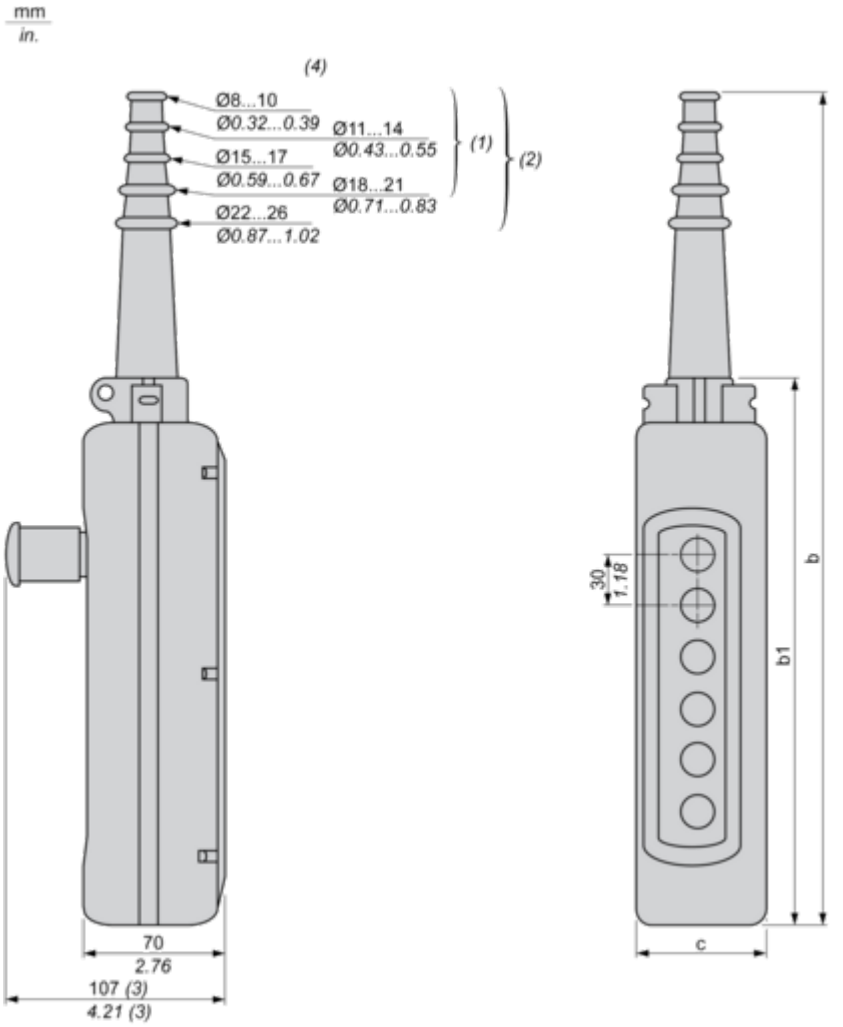

(1) For 2 and 3-way XAC A stations.
(2) For 4 to 8-way XAC A stations.
(3) With trigger action Emergency stop head operator
(4) Internal ø

Dimensions in mm

Number of cut-outs	2	3	4	5	6	8	12
b	314	314	440	440	500	560	680
b1	190	190	250	250	310	370	490
c	80	80	80	80	80	80	92

Dimensions in in.

Number of cut-outs	2	3	4	5	6	8	12
b	12.36	12.36	17.32	17.32	19.68	22.05	26.77
b1	7.48	7.48	9.84	9.84	12.20	14.57	19.29

Number of cut-outs	2	3	4	5	6	8	12
c	3.15	3.15	3.15	3.15	3.15	3.15	3.62

Connections and Schema

Control of 2-Speed Reversing Motor

With two XENG1191 contact blocks, to be ordered separately

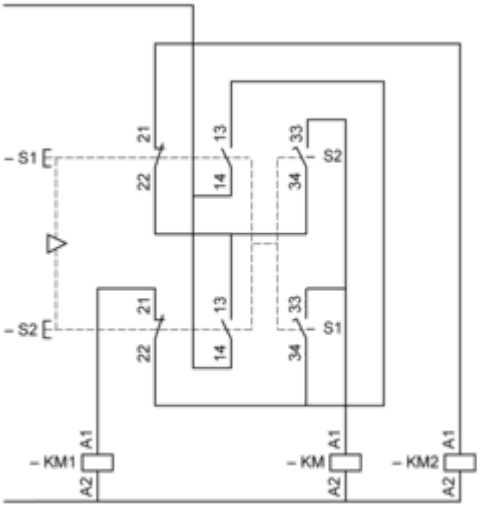

KM High speed contactor

Performance Curves

Rated Operational Power

AC Supply 50/60 Hz Inductive Circuit

Operating rate: 3600 operating cycles/hour. Load factor: 0.5.
Millions of operating cycles, AC-15 utilization category

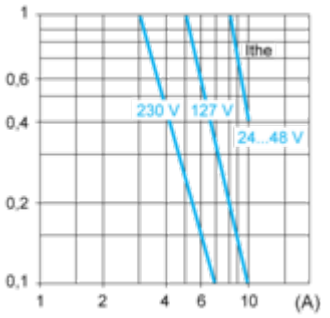

Ithe Thermal current
(A) Current

DC Supply

Operating rate: 3600 operating cycles/hour. Load factor: 0.5.
Power broken in W for 1 million operating cycles, DC-13 utilization category

Voltage	V	24	48	120
Inductive circuit	W	65	48	40