Product data sheet

Specifications

Pendant control station, Harmony XAC, plastic, yellow, 4 push buttons, 1NO

XACA471H7

Product availability: Stock - Normally stocked in distribution facility

Price*: 436.00 USD

Main

Range Of Product	Harmony XAC
Product Or Component Type	Pendant control station
Device Short Name	XACA

Complementary

Control Station Type	Double insulated
Enclosure Material	Polypropylene
Electrical Circuit Type	Control circuit
Enclosure Type	Complete ready for use
Control Station Application	Control of single speed hoist motor
Control Station Composition	4 push-buttons
Control Button Type	First push-button 1 NO raise, slow Second push-button 1 NO lower, slow Fourth push-button 1 NO left, slow Third push-button 1 NO right, slow
Product Compatibility	ZB2BE101 for each direction
Mechanical Interlocking	With mechanical interlocking between pairs
Control Station Colour	Yellow
Connections - Terminals	Screw clamp terminals, 1 x 0.5...1 x 2.5 mm² without cable end Screw clamp terminals, 1 x 0.5...2 x 1.5 mm² with cable end
Standards	IEC 60947-5-1 IEC 60204-32 CSA C22.2 No 14 UL 508
Product Certifications	CSA UL GOST CCC
Protective Treatment	TH
Ambient Air Temperature For Operation	-13…158 °F (-25…70 °C)
Ambient Air Temperature For Storage	-40…158 °F (-40…70 °C)
Vibration Resistance	15 gn 10…500 Hz)IEC 60068-2-6
Shock Resistance	100 gn IEC 60068-2-27
Overvoltage Category	Class II IEC 61140

Price is “List Price” and may be subject to a trade discount – check with your local distributor or retailer for actual price.

Disclaimer: This documentation is not intended as a substitute for and is not to be used for determining suitability or reliability of these products for specific user applications

Ip Degree Of Protection	IP65 conforming to IEC 60529
Ik Degree Of Protection	IK08 conforming to IEC 62262
Mechanical Durability	1000000 cycles
Cable Entry	Rubber sleeve with stepped entry 0.31…1.02 in (8…26 mm)
Contact Code Designation	A600 AC-15, Ue = 240 V, Ie = 3 A IEC 60947-5-1 appendix A A600 AC-15, Ue = 600 V, Ie = 1.2 A IEC 60947-5-1 appendix A Q600 DC-13, Ue = 250 V, Ie = 0.27 A IEC 60947-5-1 appendix A Q600 DC-13, Ue = 600 V, Ie = 0.1 A IEC 60947-5-1 appendix A
[Ithe] Conventional Enclosed Thermal Current	10 A
[Ui] Rated Insulation Voltage	600 V 3)
[Uimp] Rated Impulse Withstand Voltage	6 kV IEC 60947-1
Contact Operation	Slow-break
Maximum Resistance Across Terminals	25 MOhm
Operating Force	10 N push-button
Short-Circuit Protection	10 A fuse protection cartridge gG
Rated Operational Power In W	40 W DC-13 1000000 cycles 60 cyc/mn 120 V 0.5 inductive IEC 60947-5-1 appendix C 48 W DC-13 1000000 cycles 60 cyc/mn 48 V 0.5 inductive IEC 60947-5-1 appendix C 65 W DC-13 1000000 cycles 60 cyc/mn 24 V 0.5 inductive IEC 60947-5-1 appendix C
Terminals Description Iso N°1	(13-14)NO
Terminal Identifier	(13-14)NO (11-12)NC
Net Weight	1.38 lb(US) (0.625 kg)

Ordering and shipping details

Category	US1000T18407
Discount Schedule	000T
Gtin	3389110321166
Returnability	Yes
Country Of Origin	CZ

Packing Units

Unit Type Of Package 1	PCE
Number Of Units In Package 1	1
Package 1 Height	3.40 in (8.64 cm)
Package 1 Width	3.60 in (9.14 cm)
Package 1 Length	17.50 in (44.45 cm)
Package 1 Weight	1.61 lb(US) (0.73 kg)

Contractual warranty

Warranty	18 months

Sustainability

Green Premium™ label is Schneider Electric's commitment to delivering products with best-in-class environmental performance. Green Premium promises compliance with the latest regulations, transparency on environmental impacts, as well as circular and low-CO_2 products.

Guide to assessing product sustainability is a white paper that clarifies global eco-label standards and how to interpret environmental declarations.

Learn more about Green Premium >

Guide to assess a product's sustainability >

Transparency RoHS/REACh

Well-being performance

Reach Free Of Svhc	
Toxic Heavy Metal Free	
Mercury Free	
Rohs Exemption Information	Yes

Certifications & Standards

Reach Regulation	REACh Declaration
Eu Rohs Directive	Pro-active compliance (Product out of EU RoHS legal scope) EU RoHS Declaration
China Rohs Regulation	China RoHS declaration
Environmental Disclosure	Product Environmental Profile
Weee	The product must be disposed on European Union markets following specific waste collection and never end up in rubbish bins.
Circularity Profile	No need of specific recycling operations
California Proposition 65	WARNING: This product can expose you to chemicals including: Nickel compounds, which is known to the State of California to cause cancer, and Di-isodecyl phthalate (DIDP), which is known to the State of California to cause birth defects or other reproductive harm. For more information go to www.P65Warnings.ca.gov

Dimensions Drawings

Dimensions

Below drawing shows a product with 6 cut-outs. Select the number of cut-outs according to the product characteristics in order to get b, b1 and c dimensions.

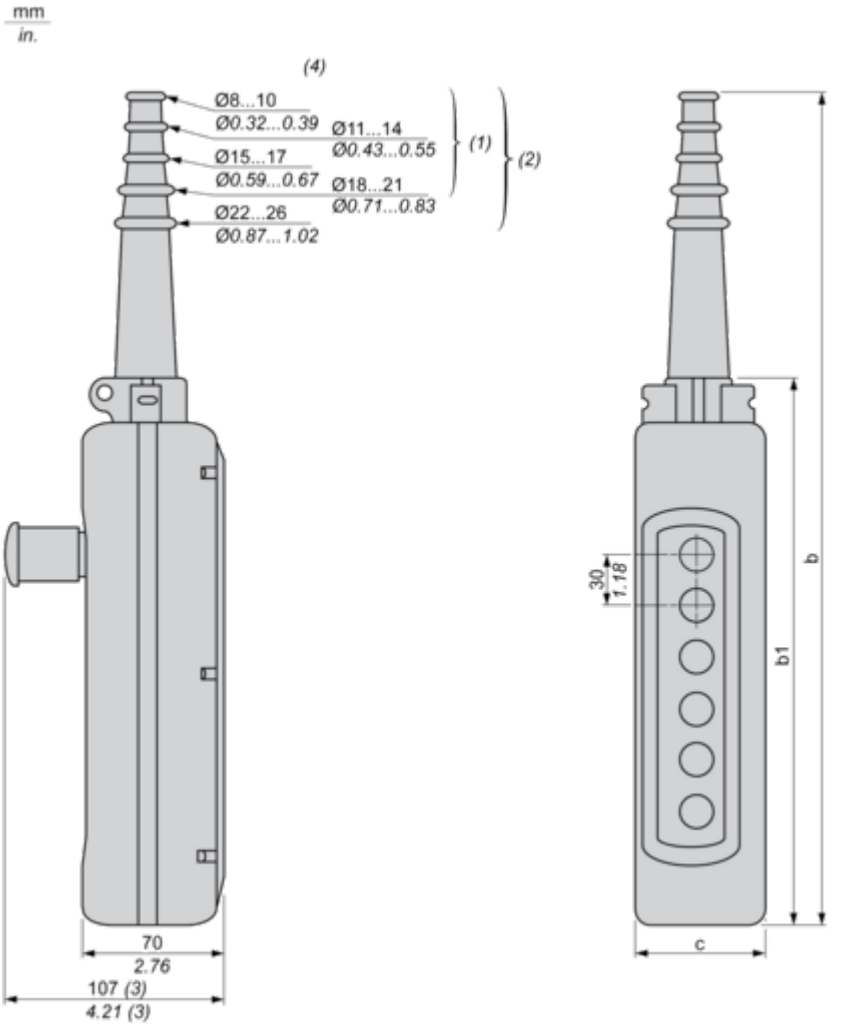

(1) For 2 and 3-way XAC A stations.
(2) For 4 to 8-way XAC A stations.
(3) With trigger action Emergency stop head operator
(4) Internal ø

Dimensions in mm

Number of cut-outs	2	3	4	5	6	8	12
b	314	314	440	440	500	560	680
b1	190	190	250	250	310	370	490
c	80	80	80	80	80	80	92

Dimensions in in.

Number of cut-outs	2	3	4	5	6	8	12
b	12.36	12.36	17.32	17.32	19.68	22.05	26.77
b1	7.48	7.48	9.84	9.84	12.20	14.57	19.29

Number of cut-outs	2	3	4	5	6	8	12
c	3.15	3.15	3.15	3.15	3.15	3.15	3.62

Connections and Schema

Control of Single-Speed Reversing Motor

With ZBE2BE101 + ZB2BE102 contacts blocks, to be ordered separately

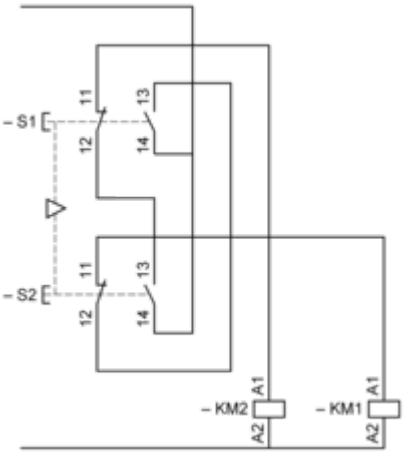

Performance Curves

Rated Operational Power

AC Supply 50/60 Hz Inductive Circuit

Operating rate: 3600 operating cycles/hour. Load factor: 0.5.
Millions of operating cycles, AC-15 utilization category

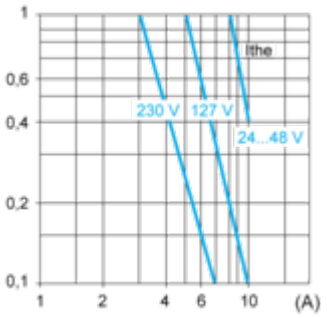

Ithe Thermal current
(A) Current

DC Supply

Operating rate: 3600 operating cycles/hour. Load factor: 0.5.
Power broken in W for 1 million operating cycles, DC-13 utilization category

Voltage	V	24	48	120
Inductive circuit	W	65	48	40