Product data sheet

Specifications

Green Premium™

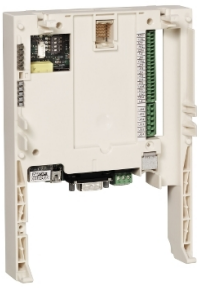

Drive controller card, Altivar IMC, 24VRDC, 16 discrete I/O, CANopen, EtherNet

VW3A3521

Discontinued - Service only

Discontinued on: Aug 28, 2023

To be end-of-service on: Dec 31, 2026

Product availability: Non-Stock - Not normally stocked in distribution facility

Main

Range Of Product	Altivar IMC
Product Or Component Type	Drive controller card
Module Configuration	Configured and programmed with SoMachine software
Product Specific Application	-
Discrete I/O Number	16
Analogue I/O Number	4

Complementary

Discrete Input Number	6 input 4 fast input
Discrete Input Type	Configurable as single phase counter LI51, LI59 Configurable for incremental encoder LI51, LI52 Configurable for incremental encoder LI59, LI60
Discrete Input Logic	Sink or source (positive/negative) input Positive logic (sink) fast input
Discrete Input Voltage	24...30 V
Discrete Input Voltage Type	DC
Number Of Common Point	1 analogue output 1 analogue input 3 logic input
Voltage State 1 Guaranteed	>= 11 V logic input
Voltage State 0 Guaranteed	<= 5 V logic input
Input Impedance	500 Ohm analogue output 4.4 kOhm logic input
Network Frequency	<= 100 kHz fast input (counter mode) <= 100 kHz fast input (encoder mode)
Discrete Output Number	6 transistor output
Discrete Output Logic	Positive logic (source)
Discrete Output Voltage	24...30 V DC transistor output
Discrete Output Current	2 A transistor output LO51...LO56)
Output Compatibility	Level 1 PLC transistor output
Absolute Accuracy Error	+/- 1 % for a temperature variation 60 °C analogue input +/- 1 % for a temperature variation 60 °C analogue output

Price is “List Price” and may be subject to a trade discount – check with your local distributor or retailer for actual price.

Disclaimer: This documentation is not intended as a substitute for and is not to be used for determining suitability or reliability of these products for specific user applications

Short-Circuit Protection	With output and fast output
Overvoltage Protection	With output and fast output
Overload Protection	With output and fast output
Analogue Input Number	2
Analogue Input Type	Configurable voltage or current
Analogue Input Range	0...5 V 0...20 mA
Analogue Input Resolution	10 bits
Analogue Output Number	2
Analogue Output Range	0...20 mA
Analogue Output Resolution	12 bits
Linearity Error	+/- 0.4 % of maximum value analogue input +/- 0.2 % of maximum value analogue output
[Us] Rated Supply Voltage	24 V DC
Supply Voltage Limits	19…30 V
Memory Description	Internal RAM 2000 kB Flash 2000 kB Internal data storage (FRAM) 64 ko Program memory 1 Mo
Integrated Connection Type	MDI/MDX port RJ45 Ethernet 10BASE-T/100BASE-TX Programmation port mini B USB 480 Mbit/s CANopen male SUB-D 9 CANopen master
Canopen Feature Profile	DS 301 V4.02 DR 303-1
Level Or Class	Class M20 - 32 CANopen
Communication Service	320 TPDOs and RPDOs maxi 10 PDOs per slave (transmission/emission)
Transmission Rate	1000 kbit/s 65.62 ft (20 m) CANopen 500 kbit/s 328.08 ft (100 m) CANopen 250 kbit/s 820.21 ft (250 m) CANopen 125 kbit/s 1640.42 ft (500 m) CANopen 50 kbit/s 3280.84 ft (1000 m) CANopen 20 kbit/s 8202.10 ft (2500 m) CANopen
Local Signalling	for ETH (Ethernet activity) 1 LED (green/yellow) for NS (Network Status) 1 LED (green/red) for MS (Module Status) 1 LED (green/red) for CAN (CANopen activity) 1 LED (green/red) for USER (programmable) 1 LED (green/red)
Electrical Connection	1 connector with removable screw terminal block - 3 contacts - <= 1 x 1.5 mm² - AWG 16 for connecting the 24 V DC power supply 3 connectors with screw terminal block - <= 1 x 1.5 mm² - AWG 16 for inputs/outputs 1 connector - mini B USB for programming with SoMachine software 1 male connector - SUB-D 9 for connection to the CANopen bus 1 connector - RJ45 for programming with SoMachine software/Ethernet Modbus TCP network
Tightening Torque	2.21 lbf.in (0.25 N.m)
Associated Complete Product	ATV71 ATV61 TCSXCNAMUM3P
Net Weight	0.41 lb(US) (0.185 kg)

Ordering and shipping details

Category	US1CP4C22135
Discount Schedule	CP4C

Gtin	3606480483875
Returnability	No
Country Of Origin	US

Packing Units

Unit Type Of Package 1	PCE
Number Of Units In Package 1	1
Package 1 Height	2.95 in (7.5 cm)
Package 1 Width	6.69 in (17.0 cm)
Package 1 Length	9.25 in (23.5 cm)
Package 1 Weight	14.25 oz (404.0 g)
Unit Type Of Package 2	S03
Number Of Units In Package 2	2
Package 2 Height	11.81 in (30.0 cm)
Package 2 Width	11.81 in (30.0 cm)
Package 2 Length	15.75 in (40.0 cm)
Package 2 Weight	2.88 lb(US) (1.308 kg)

Contractual warranty

Warranty	18 months

Sustainability

Green Premium™ label is Schneider Electric's commitment to delivering products with best-in-class environmental performance. Green Premium promises compliance with the latest regulations, transparency on environmental impacts, as well as circular and low-CO_2 products.

Guide to assessing product sustainability is a white paper that clarifies global eco-label standards and how to interpret environmental declarations.

Learn more about Green Premium >

Guide to assess a product's sustainability >

Transparency RoHS/REACh

Well-being performance

Mercury Free	
Rohs Exemption Information	Yes
Pvc Free	

Certifications & Standards

Reach Regulation	REACh Declaration
Eu Rohs Directive	Pro-active compliance (Product out of EU RoHS legal scope)
China Rohs Regulation	China RoHS declaration
Environmental Disclosure	Product Environmental Profile
Circularity Profile	No need of specific recycling operations
California Proposition 65	WARNING: This product can expose you to chemicals including: Lead and lead compounds, which is known to the State of California to cause cancer and birth defects or other reproductive harm. For more information go to www.P65Warnings.ca.gov

Connections and Schema

Terminals of the Card

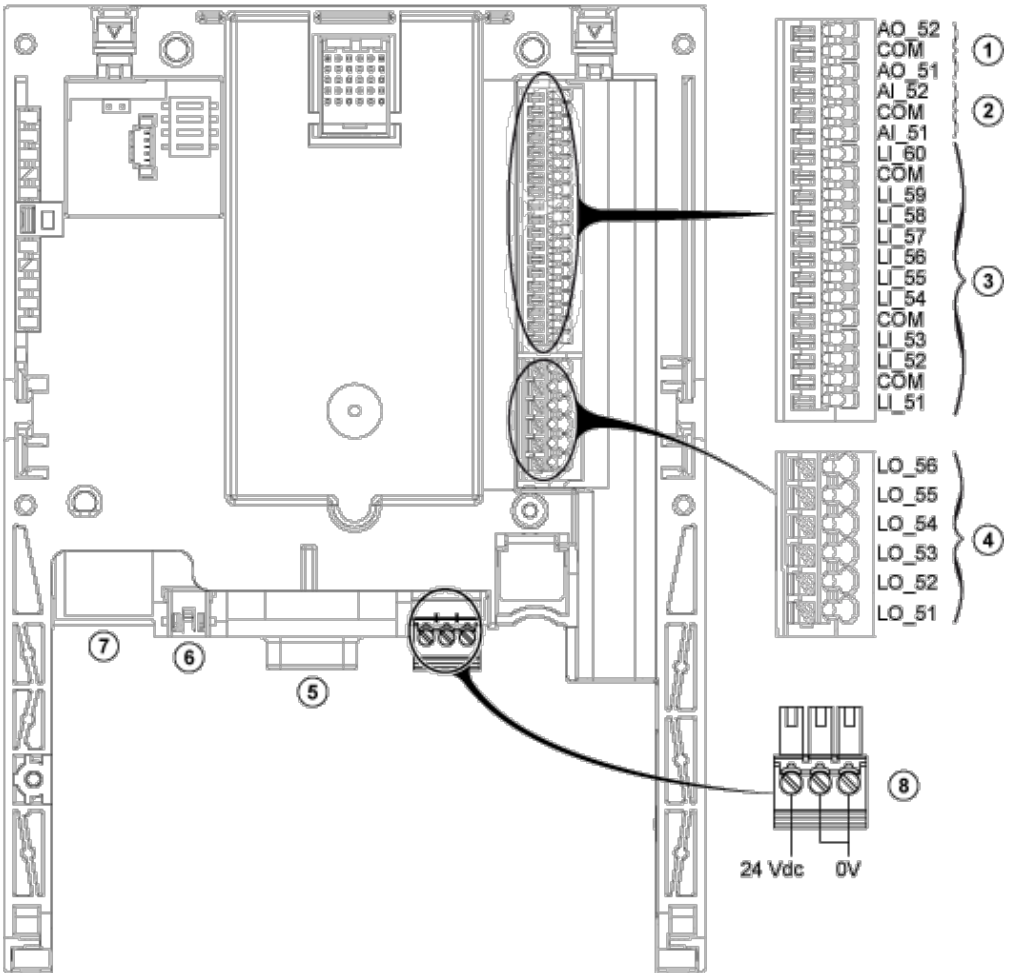

(1) Analog Outputs

(2) Analog Inputs

(3) Digital Inputs

(4) Digital Outputs

(5) CANopen SubD9

(6) Mini USB

(7) Ethernet RJ45

(8) 24 Vdc terminal block

Logic Inputs LI51…LI60

Shielded Twisted Pair

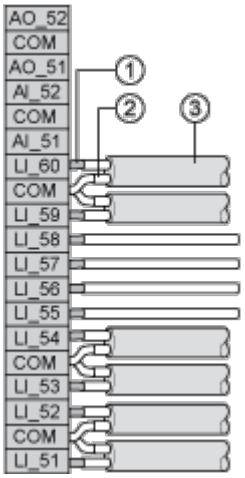

(1) Signal

(2) Common

(3) Shield connected to the ground

I/O Wiring Diagrams

Current Mode, Power Consumption < 200 mA

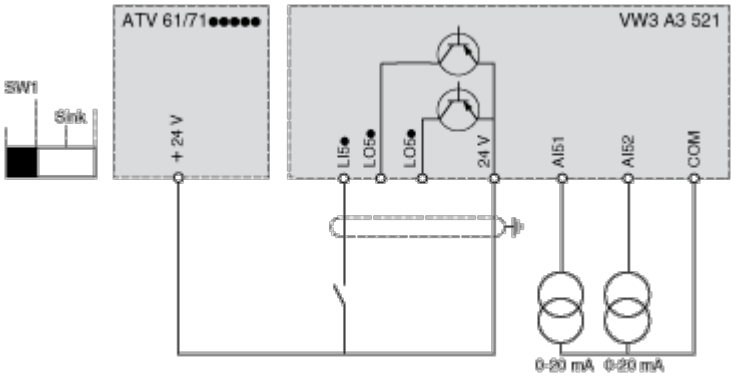

Voltage Mode, Power Consumption < 200 mA

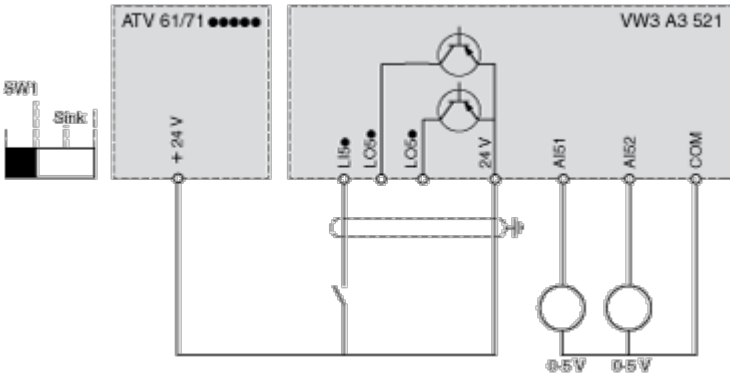

Current Mode, Card Powered by External Power Supply

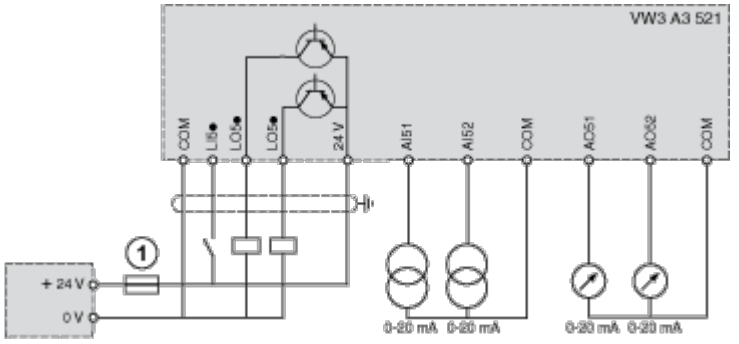

(1) 2 A fast blow fuse for power supply