Product data sheet

Specifications

Discrete I/O expansion block, Modicon TM7, IP67, 16 DI/DO, 24 V DC, 0.5 A, M12 connector

TM7BDM16A

Product availability: Non-Stock - Not normally stocked in distribution facility

Price*: 753.00 USD

Main

Range Of Product	Modicon TM7
Product Or Component Type	Discrete I/O expansion block
Range Compatibility	Modicon M258 Modicon LMC058
Enclosure Material	Plastic
Bus Type	TM7 bus
[Ue] Rated Operational Voltage	24 V DC
Input/Output Number	16
Input/Output Number Of Block	16 I/O

Complementary

Discrete Input Number	0…16 configurable by software
Discrete Input Voltage	24 V
Discrete Input Voltage Type	DC
Discrete Input Current	4.4 mA
Discrete Input Logic	Positive
Discrete Output Number	0…16 <= 0.5 A transistor configurable by software)
Discrete Output Voltage	24 V
Discrete Output Voltage Type	DC
Sensor Power Supply	24 V, 500 mA for all channels overload, short-circuit and reverse polarity protection
Electrical Connection	1 male connector M12 - B coding - 4 ways bus IN 1 female connector M12 - B coding - 4 ways bus OUT 1 male connector M8 - 4 ways power IN 1 female connector M8 - 4 ways power OUT 8 female connectors M12 - 5 ways sensor or actuator
Local Signalling	for bus diagnostic 2 LEDs for sensor power supply diagnostics 2 LEDs
Operating Position	Any position
Fixing Mode	By 2 screws
Net Weight	0.71 lb(US) (0.32 kg)

Environment

Standards	IEC 61131-2

Price is “List Price” and may be subject to a trade discount – check with your local distributor or retailer for actual price.

Disclaimer: This documentation is not intended as a substitute for and is not to be used for determining suitability or reliability of these products for specific user applications

Product Certifications	ATEX II 3g EEx nA II T5 GOST-R cURus C-tick
Marking	CE
Ambient Air Temperature For Operation	14…140 °F (-10…60 °C)
Ambient Air Temperature For Storage	-13…185 °F (-25…85 °C)
Relative Humidity	5…95 % without condensation or dripping water
Pollution Degree	2 IEC 60664
Ip Degree Of Protection	IP67 conforming to IEC 61131-2
Operating Altitude	0...6561.68 ft (0...2000 m)
Storage Altitude	0.00…9842.52 ft (0…3000 m)
Vibration Resistance	7.5 mm constant amplitude 2…8 Hz)IEC 60721-3-5 Class 5M3 2 gn constant acceleration 8…200 Hz)IEC 60721-3-5 Class 5M3 4 gn constant acceleration 200…500 Hz)IEC 60721-3-5 Class 5M3
Shock Resistance	30 gn 11 ms IEC 60721-3-5 Class 5M3
Electromagnetic Compatibility	Electrostatic discharge immunity test, 4 kV on contact IEC 61000-4-2 Electrostatic discharge immunity test, 8 kV in air IEC 61000-4-2 Susceptibility to electromagnetic fields, 1 V/m 2...2.7 GHz IEC 61000-4-3 Susceptibility to electromagnetic fields, 10 V/m 80...2000 MHz IEC 61000-4-3 Electrical fast transient/burst immunity test, 2 kV power supply IEC 61000-4-4 Electrical fast transient/burst immunity test, 1 kV input/output IEC 61000-4-4 Electrical fast transient/burst immunity test, 1 kV shielded cable IEC 61000-4-4 1.2/50 µs shock waves immunity test, 0.5 kV power supply (common mode) IEC 61000-4-5 1.2/50 µs shock waves immunity test, 1 kV power supply (differential mode) IEC 61000-4-5 1.2/50 µs shock waves immunity test, 0.5 kV unshielded links (common mode) IEC 61000-4-5 1.2/50 µs shock waves immunity test, 1 kV unshielded links (differential mode) IEC 61000-4-5 1.2/50 µs shock waves immunity test, 0.5 kV shielded links (common mode) IEC 61000-4-5 1.2/50 µs shock waves immunity test, 1 kV shielded links (differential mode) IEC 61000-4-5 Conducted RF disturbances IEC 61000-4-6 Conducted and radiated emissions CISPR 11

Ordering and shipping details

Category	US1PC1222532
Discount Schedule	PC12
Gtin	3595864093093
Returnability	No
Country Of Origin	AT

Packing Units

Unit Type Of Package 1	PCE
Number Of Units In Package 1	1
Package 1 Height	1.81 in (4.600 cm)
Package 1 Width	2.17 in (5.500 cm)
Package 1 Length	7.01 in (17.800 cm)
Package 1 Weight	12.38 oz (351.000 g)
Unit Type Of Package 2	S02

Number Of Units In Package 2	24
Package 2 Height	5.91 in (15.000 cm)
Package 2 Width	11.81 in (30.000 cm)
Package 2 Length	15.75 in (40.000 cm)
Package 2 Weight	19.14 lb(US) (8.684 kg)

Contractual warranty

Warranty	18 months

Sustainability

Green Premium™ label is Schneider Electric's commitment to delivering products with best-in-class environmental performance. Green Premium promises compliance with the latest regulations, transparency on environmental impacts, as well as circular and low-CO_2 products.

Guide to assessing product sustainability is a white paper that clarifies global eco-label standards and how to interpret environmental declarations.

Learn more about Green Premium >

Guide to assess a product's sustainability >

Transparency RoHS/REACh

Well-being performance

Reach Free Of Svhc	
Toxic Heavy Metal Free	
Mercury Free	
Rohs Exemption Information	Yes
Pvc Free	

Certifications & Standards

Reach Regulation	REACh Declaration
Eu Rohs Directive	Pro-active compliance (Product out of EU RoHS legal scope) EU RoHS Declaration
China Rohs Regulation	China RoHS declaration
Environmental Disclosure	Product Environmental Profile
Weee	The product must be disposed on European Union markets following specific waste collection and never end up in rubbish bins.
Circularity Profile	End of Life Information
California Proposition 65	WARNING: This product can expose you to chemicals including: Lead and lead compounds, which is known to the State of California to cause cancer and birth defects or other reproductive harm. For more information go to www.P65Warnings.ca.gov

Presentation

Digital Mixed Block

Description

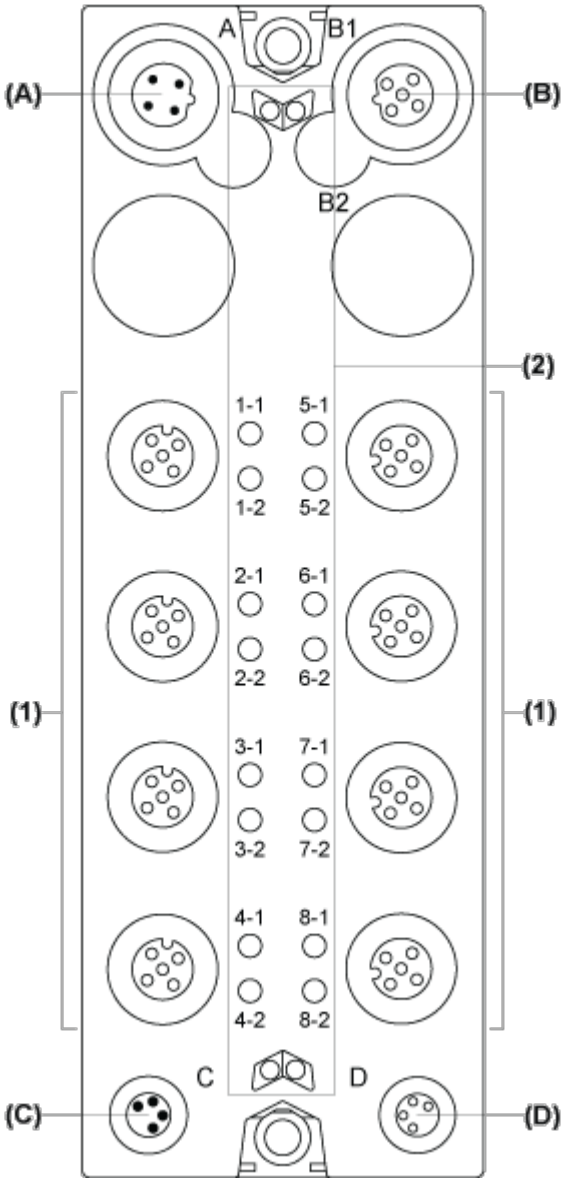

(A) TM7 bus IN connector

(B) TM7 bus OUT connector

(C) 24 Vdc power IN connector

(D) 24 Vdc power OUT connector

(1) Input / Output connectors

(2) Status LEDs

Connector and Channel Assignments

I/O connectors	Channel types	Channels
1	Input/Output	I0/Q0
	Input/Output	I1/Q1

I/O connectors	Channel types	Channels
2	Input/Output	I2/Q2
	Input/Output	I3/Q3
3	Input/Output	I4/Q4
	Input/Output	I5/Q5
4	Input/Output	I6/Q6
	Input/Output	I7/Q7
5	Input/Output	I8/Q8
	Input/Output	I9/Q9
6	Input/Output	I10/Q10
	Input/Output	I11/Q11
7	Input/Output	I12/Q12
	Input/Output	I13/Q13
8	Input/Output	I14/Q14
	Input/Output	I15/Q15

Dimensions Drawings

TM7 Block, Size 2

Dimensions

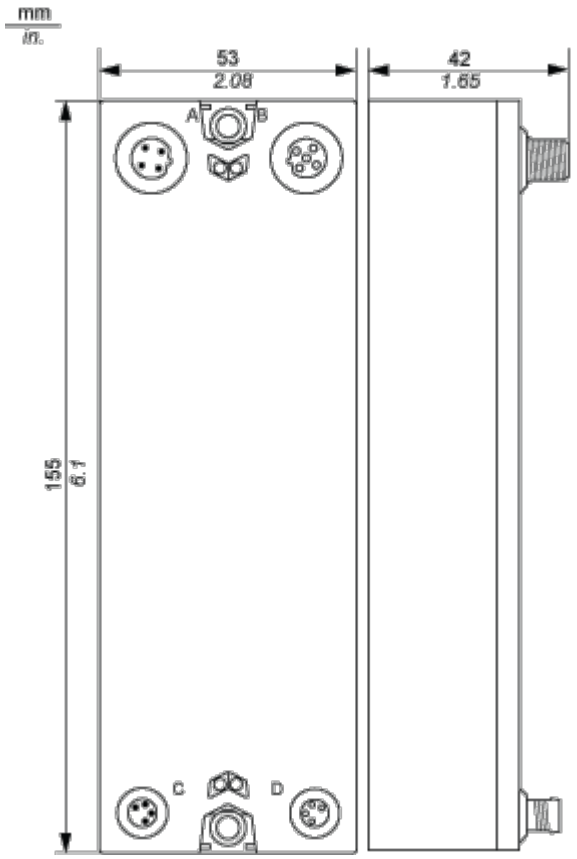

Mounting and Clearance

Spacing Requirements

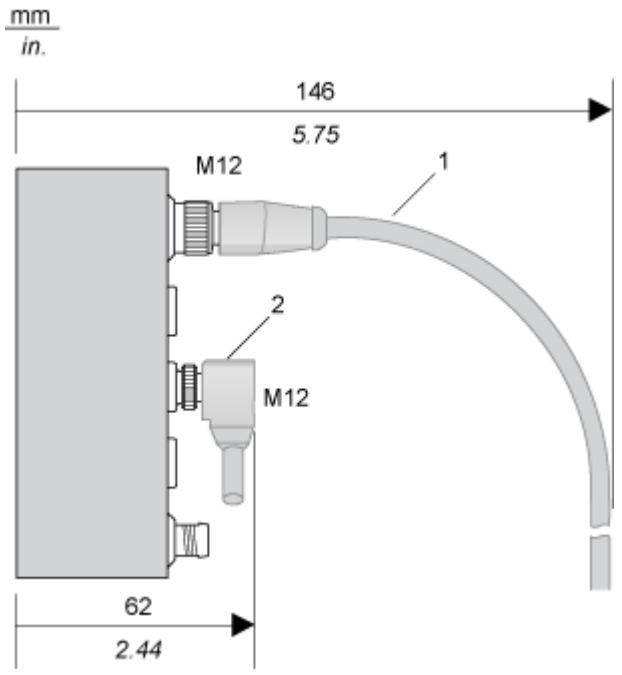

1 Straight cable

2 Elbowed cable

Installation Guidelines

TM7 Block on an Aluminium Frame

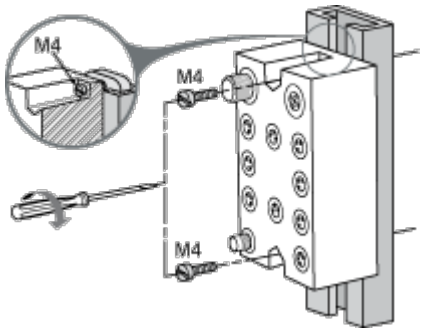

NOTE: Maximum torque to fasten the required M4 screws is 0.6 N.m (5.3 lbf-in).

TM7 Block on a DIN Rail

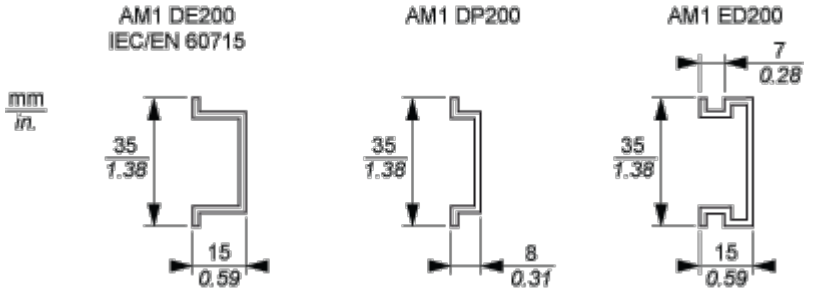

NOTE: Only size 1 (smallest) blocks can be installed on DIN rail with the TM7ACMP mounting plate.

TM7 Block Directly on the Machine

Drilling template of the block:

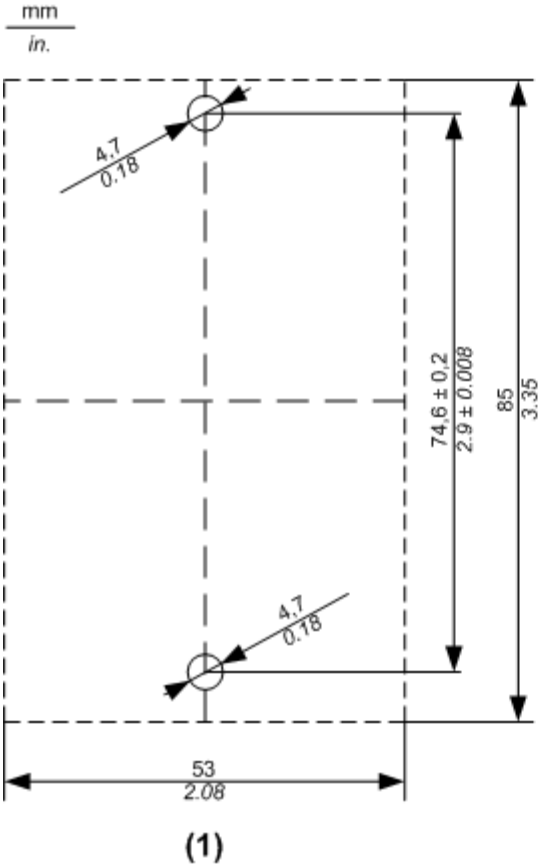

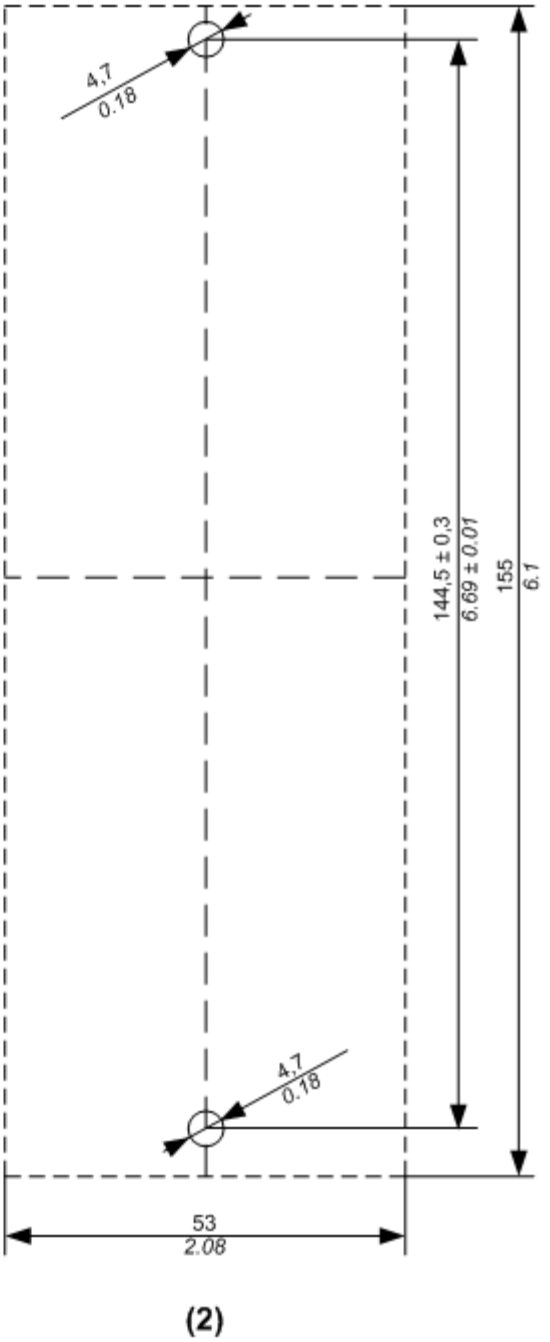

(1) Size 1

(2) Size 2

The thickness of the base plate should be taken into consideration when defining the screw length.

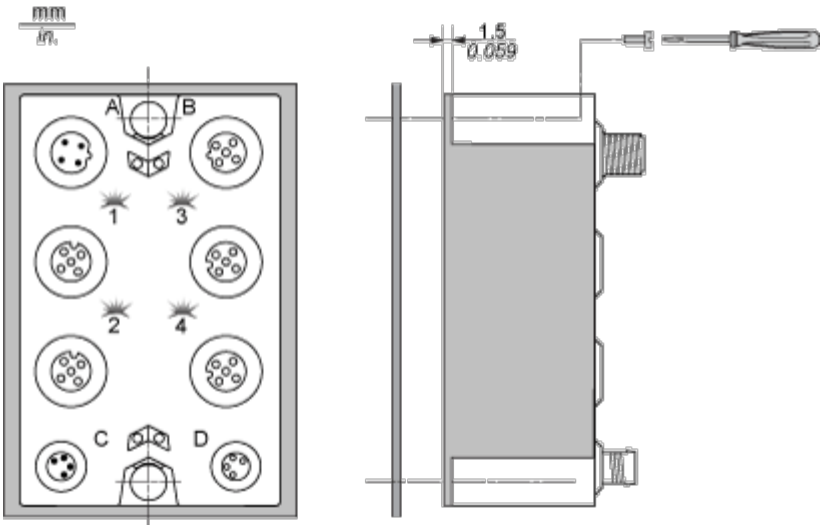

NOTE: Maximum torque to fasten the required M4 screws is 0.6 N.m (5.3 lbf-in).

Connections and Schema

Wiring Diagram

Pin Assignments for I/O Connectors

Connection	Pin	M12 input / output
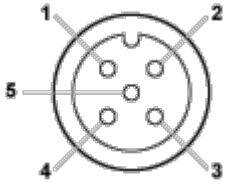	1	24 Vdc sensor / actuator supply
	2	DI/DO: input/output signal channel 1
	3	0 Vdc
	4	DI/DO: input/output signal channel 2
	5	N.C.

Wiring the Power Supply

When you provide power to a TM7 I/O block using the 24 VDC Power OUT connector of the preceding I/O block, both blocks occupy the same 24 Vdc I/O power segment. However, if you connect an external isolated power supply to the 24 Vdc Power IN connector of a TM7 I/O block, you establish a new 24 Vdc I/O power segment beginning with that I/O block.
I/O block wired with one external 24 Vdc power supply:

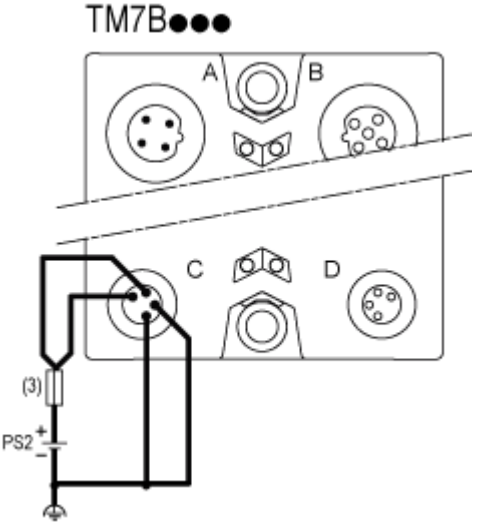

(3) External fuse, Type T slow-blow, 8 A max., 250 V

PS2 External isolated I/O power supply, 24 Vdc

Performance Curves

Switching Inductive Load Characteristics

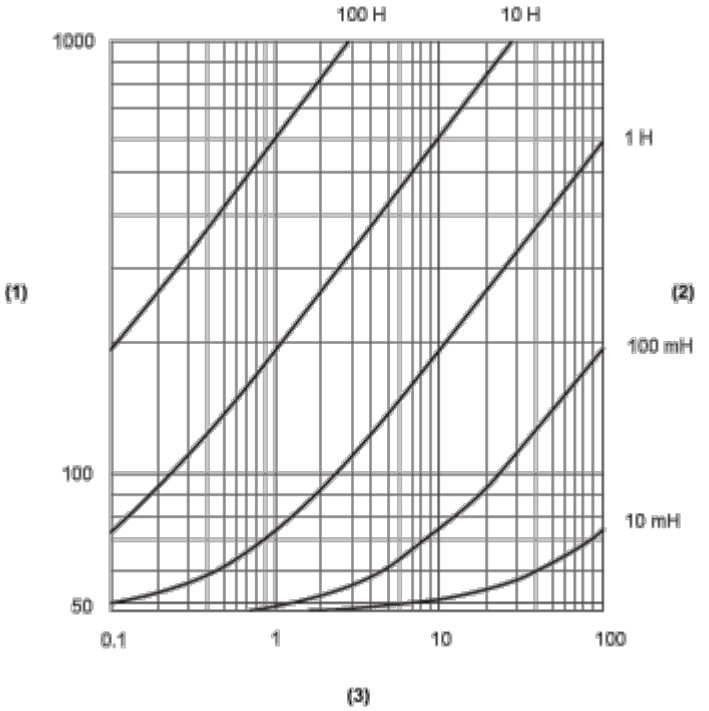

(1) Load resistance in Ω

(2) Load inductance in H

(3) Max. operating cycles / second