# Product data sheet

Specifications

## Analog I/O expansion block, Modicon TM7, IP67, 4 AI, +/-10 V, M12 connector

TM7BAI4VLA

**Product availability: Non-Stock - Not normally stocked in distribution facility**

**Price*: 858.00 USD**

## Main

| | |
|---|---|
| **Range Of Product** | Modicon TM7 |
| **Product Or Component Type** | Analog I/O expansion block |
| **Range Compatibility** | Modicon M258<br>Modicon LMC058 |
| **Enclosure Material** | Plastic |
| **Bus Type** | TM7 bus |
| **[Ue] Rated Operational Voltage** | 24 V DC |
| **Input/Output Number** | 4 |
| **Input/Output Number Of Block** | 4 I |

## Complementary

| | |
|---|---|
| **Analogue Input Number** | 4 |
| **Analogue Input Type** | Voltage |
| **Analogue Input Range** | +/- 10 V |
| **Analogue Input Resolution** | 11 bits + sign |
| **Sensor Power Supply** | 24 V, 500 mA for all channels overload, short-circuit and reverse polarity protection |
| **Electrical Connection** | 1 male connector M12 - B coding - 4 ways bus IN<br>1 female connector M12 - B coding - 4 ways bus OUT<br>4 female connectors M12 - A coding - 5 ways sensor<br>1 male connector M8 - 4 ways power IN<br>1 female connector M8 - 4 ways power OUT |
| **Local Signalling** | for bus diagnostic 2 LEDs<br>for sensor/actuator power supply status 2 LEDs |
| **Operating Position** | Any position |
| **Fixing Mode** | By 2 screws |
| **Net Weight** | 0.44 lb(US) (0.2 kg) |

## Environment

| | |
|---|---|
| **Standards** | IEC 61131-2 |
| **Product Certifications** | cURus<br>GOST-R<br>ATEX II 3g EEx nA II T5<br>C-tick |
| **Marking** | CE |

Price is “List Price” and may be subject to a trade discount – check with your local distributor or retailer for actual price.

Disclaimer: This documentation is not intended as a substitute for and is not to be used for determining suitability or reliability of these products for specific user applications

| | |
|---|---|
| **Ambient Air Temperature For Operation** | 14…140 °F (-10…60 °C) |
| **Ambient Air Temperature For Storage** | -13…185 °F (-25…85 °C) |
| **Relative Humidity** | 5…95 % without condensation or dripping water |
| **Pollution Degree** | 2 IEC 60664 |
| **Ip Degree Of Protection** | IP67 conforming to IEC 61131-2 |
| **Operating Altitude** | 0...6561.68 ft (0...2000 m) |
| **Storage Altitude** | 0.00…9842.52 ft (0…3000 m) |
| **Vibration Resistance** | 7.5 mm constant amplitude 2…8 Hz)IEC 60721-3-5 Class 5M3<br>2 gn constant acceleration 8…200 Hz)IEC 60721-3-5 Class 5M3<br>4 gn constant acceleration 200…500 Hz)IEC 60721-3-5 Class 5M3 |
| **Shock Resistance** | 30 gn 11 ms IEC 60721-3-5 Class 5M3 |
| **Resistance To Electrostatic Discharge** | 6 kV in contact IEC 61000-4-2<br>8 kV in air IEC 61000-4-2 |
| **Resistance To Electromagnetic Fields** | 9.14 V/m (10 V/m) 0.08…2 Hz IEC 61000-4-3<br>0.91 V/m (1 V/m) 2…2.7 Hz IEC 61000-4-3 |
| **Resistance To Fast Transients** | 2 kV IEC 61000-4-4 power supply)<br>1 kV IEC 61000-4-4 input/output)<br>1 kV IEC 61000-4-4 shielded cable) |
| **Surge Withstand For Dc 24 V Circuit** | 1 kV power supply (common mode) IEC 61000-4-5<br>0.5 kV power supply (differential mode) IEC 61000-4-5<br>1 kV unshielded links (common mode) IEC 61000-4-5<br>0.5 kV unshielded links (differential mode) IEC 61000-4-5<br>1 kV shielded links (common mode) IEC 61000-4-5<br>0.5 kV shielded links (differential mode) IEC 61000-4-5 |
| **Electromagnetic Compatibility** | EN/IEC 61000-4-6 |
| **Disturbance Radiated/Conducted** | CISPR 11 |

## Ordering and shipping details

| | |
|---|---|
| **Category** | US1PC1222532 |
| **Discount Schedule** | PC12 |
| **Gtin** | 3595864093123 |
| **Returnability** | No |
| **Country Of Origin** | AT |

## Packing Units

| | |
|---|---|
| **Unit Type Of Package 1** | PCE |
| **Number Of Units In Package 1** | 1 |
| **Package 1 Height** | 1.97 in (5.000 cm) |
| **Package 1 Width** | 2.36 in (6.000 cm) |
| **Package 1 Length** | 4.13 in (10.500 cm) |
| **Package 1 Weight** | 7.62 oz (216.000 g) |
| **Unit Type Of Package 2** | S02 |
| **Number Of Units In Package 2** | 24 |
| **Package 2 Height** | 5.91 in (15.000 cm) |
| **Package 2 Width** | 11.81 in (30.000 cm) |
| **Package 2 Length** | 15.75 in (40.000 cm) |

| | |
|---|---|
| **Package 2 Weight** | 12.18 lb(US) (5.525 kg) |

## Contractual warranty

| | |
|---|---|
| **Warranty** | 18 months |

## Sustainability

**Green Premium™ label** is Schneider Electric's commitment to delivering products with best-in-class environmental performance. Green Premium promises compliance with the latest regulations, transparency on environmental impacts, as well as circular and low-$CO_2$ products.

**Guide to assessing product sustainability** is a white paper that clarifies global eco-label standards and how to interpret environmental declarations.

Learn more about Green Premium >

Guide to assess a product's sustainability >

Transparency RoHS/REACh

## Well-being performance

| | |
|---|---|
| Toxic Heavy Metal Free | |
| Mercury Free | |
| Rohs Exemption Information | Yes |
| Pvc Free | |

## Certifications & Standards

| | |
|---|---|
| **Reach Regulation** | REACh Declaration |
| **Eu Rohs Directive** | Pro-active compliance (Product out of EU RoHS legal scope) |
| **China Rohs Regulation** | China RoHS declaration |
| **Environmental Disclosure** | Product Environmental Profile |
| **Weee** | The product must be disposed on European Union markets following specific waste collection and never end up in rubbish bins. |
| **Circularity Profile** | End of Life Information |
| **California Proposition 65** | WARNING: This product can expose you to chemicals including: Lead and lead compounds, which is known to the State of California to cause cancer and birth defects or other reproductive harm. For more information go to www.P65Warnings.ca.gov |

## Presentation

### Analog Input Block

#### Description

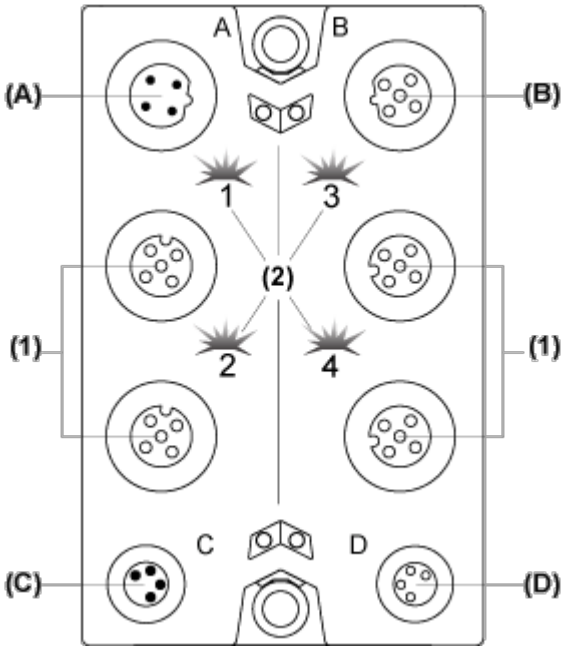


(A) TM7 bus IN connector

(B) TM7 bus OUT connector

(C) 24 Vdc power IN connector

(D) 24 Vdc power OUT connector

(1) Input connectors

(2) Status LEDs

#### Connector and Channel Assignments

| Input connectors | Channel type | Channels |
|---|---|---|
| 1 | Input | I0 |
| 2 | Input | I1 |
| 3 | Input | I2 |
| 4 | Input | I3 |

## Dimensions Drawings

### TM7 Block, Size 1

#### Dimensions

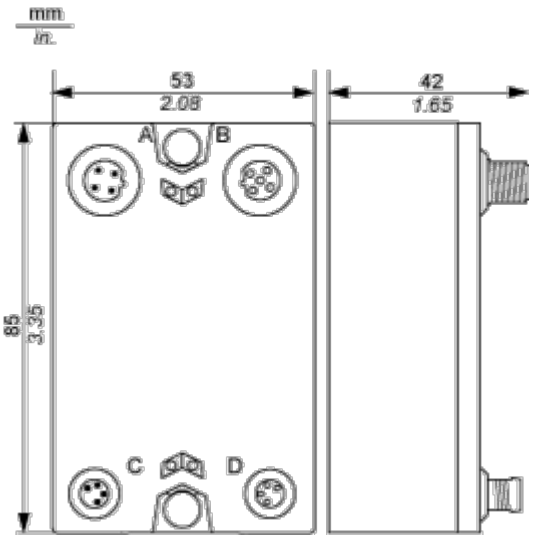

## Mounting and Clearance

### Spacing Requirements

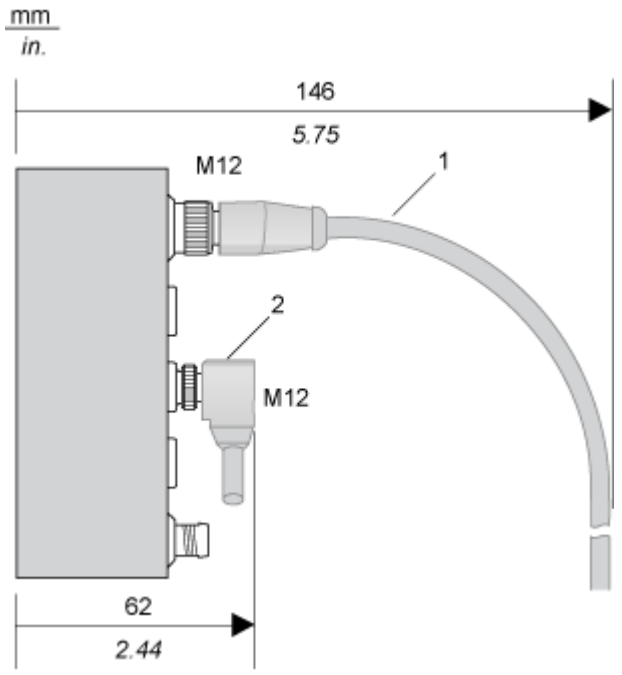


1 Straight cable

2 Elbowed cable

## Installation Guidelines

### TM7 Block on an Aluminium Frame

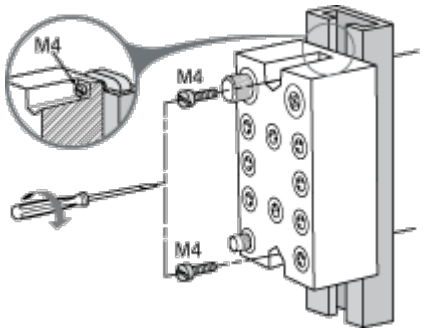


NOTE: Maximum torque to fasten the required M4 screws is 0.6 N.m (5.3 lbf-in).

### TM7 Block on a DIN Rail

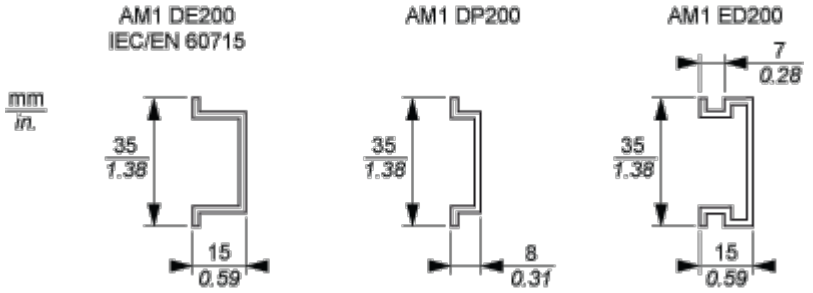


NOTE: Only size 1 (smallest) blocks can be installed on DIN rail with the TM7ACMP mounting plate.

### TM7 Block Directly on the Machine

Drilling template of the block:

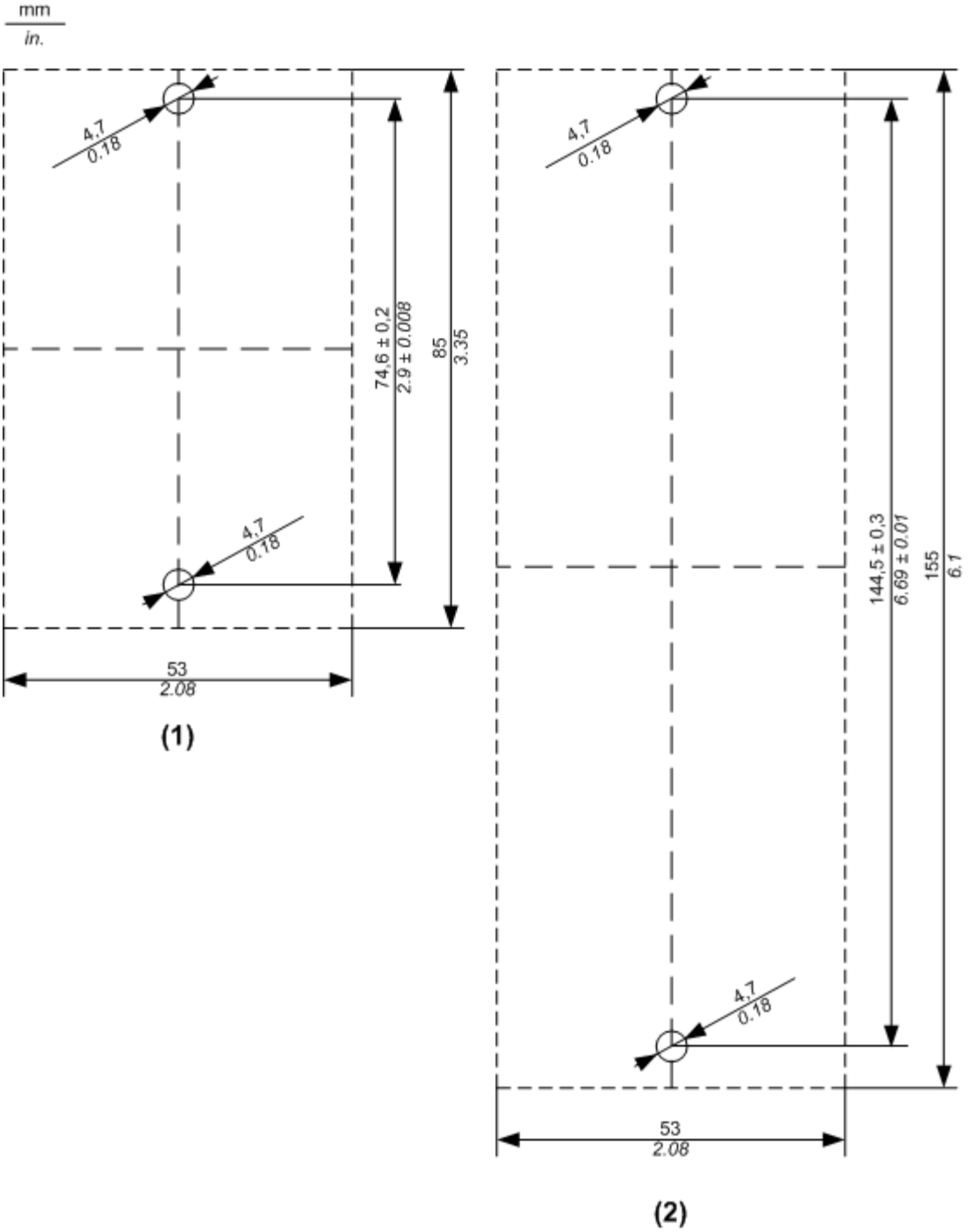


(1) Size 1

(2) Size 2

The thickness of the base plate should be taken into consideration when defining the screw length.

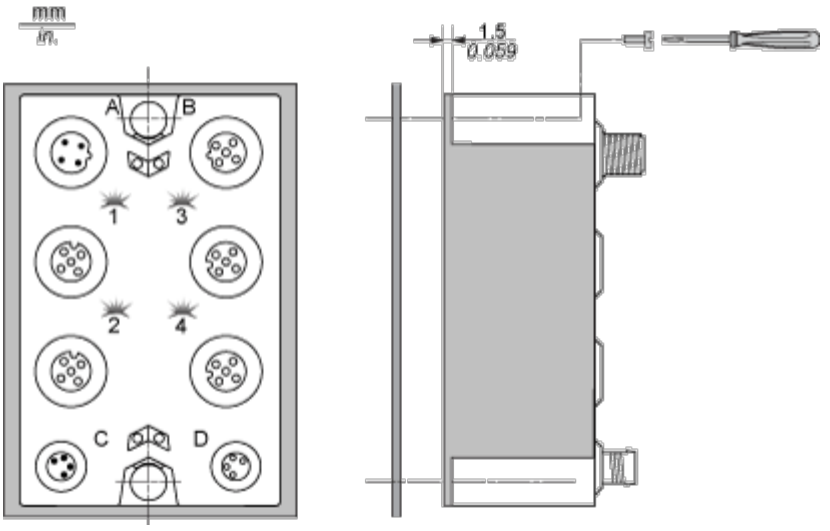


NOTE: Maximum torque to fasten the required M4 screws is 0.6 N.m (5.3 lbf-in).

## Connections and Schema

### Wiring Diagram

#### Pin Assignments for Input Connectors

| Connection | Pin | M12 input |
|---|---|---|
| 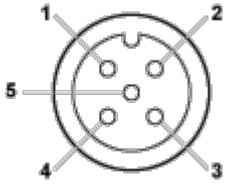  | **1** | 24 Vdc sensor supply |
| | **2** | Analog input + |
| | **3** | 0 Vdc |
| | **4** | Analog input - |
| | **5** | Shield |

## Wiring the Power Supply

When you provide power to a TM7 I/O block using the 24 VDC Power OUT connector of the preceding I/O block, both blocks occupy the same 24 Vdc I/O power segment. However, if you connect an external isolated power supply to the 24 Vdc Power IN connector of a TM7 I/O block, you establish a new 24 Vdc I/O power segment beginning with that I/O block.
I/O block wired with one external 24 Vdc power supply:

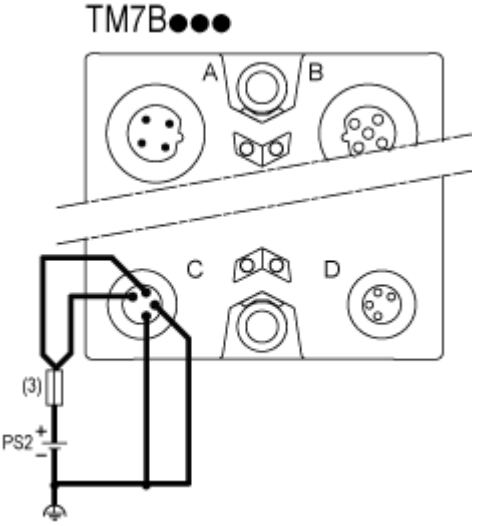


(3) External fuse, Type T slow-blow, 8 A max., 250 V

PS2 External isolated I/O power supply, 24 Vdc