Product data sheet

Specifications

discrete input module, Modicon TM3, 8 inputs, screw, 120V AC

TM3DI8A

Product availability: Stock - Normally stocked in distribution facility

Price*: 120.00 USD

Main

Range Of Product	Modicon TM3
Product Or Component Type	Discrete input module
Range Compatibility	Modicon M241 Modicon M251 Modicon M221 Modicon M262
Discrete Input Number	8 input IEC 61131-2 Type 1
Discrete Input Voltage	120 V
Discrete Input Current	7.5 mA input

Complementary

Discrete I/O Number	8
Current Consumption	0 mA 24 V DC via bus connector at state on) 0 mA 24 V DC via bus connector at state off) 70 mA 5 V DC via bus connector at state on) 25 mA 5 V DC via bus connector at state off)
Discrete Input Voltage Type	AC
Voltage State 1 Guaranteed	79...132 V input
Current State 1 Guaranteed	2...15 mA input)
Voltage State 0 Guaranteed	0...20 V input
Current State 0 Guaranteed	<= 15 mA input)
Input Impedance	11 kOhm
Response Time	25 ms (turn-on) 30 ms (turn-off)
Local Signalling	for input status 1 LED per channel (green)
Electrical Connection	11 x 2.5 mm² removable screw terminal block pitch 5.08 mm for inputs
Insulation	Non-insulated between inputs Between input and internal logic 1500 V AC Between input groups 1500 V AC
Marking	CE
Mounting Support	Top hat type TH35-15 rail IEC 60715 Top hat type TH35-7.5 rail IEC 60715 plate or panel with fixing kit
Height	3.54 in (90 mm)
Depth	3.33 in (84.6 mm)
Width	1.08 in (27.4 mm)

Price is “List Price” and may be subject to a trade discount – check with your local distributor or retailer for actual price.

Disclaimer: This documentation is not intended as a substitute for and is not to be used for determining suitability or reliability of these products for specific user applications

Environment

Standards	IEC 61131-2
Product Certifications	cULus CE UKCA RCM EAC cULus HazLoc
Resistance To Electrostatic Discharge	8 kV in air IEC 61000-4-2 4 kV on contact IEC 61000-4-2
Resistance To Electromagnetic Fields	9.14 V/m (10 V/m) 80 MHz...1 GHz IEC 61000-4-3 2.74 V/m (3 V/m) 1.4 GHz...2 GHz IEC 61000-4-3 0.91 V/m (1 V/m) 2 GHz...3 GHz IEC 61000-4-3
Resistance To Magnetic Fields	98.43 A/m (30 A/m) 50/60 Hz IEC 61000-4-8
Resistance To Fast Transients	1 kV I/OIEC 61000-4-4
Surge Withstand	2 kV I/O common mode IEC 61000-4-5 AC
Resistance To Conducted Disturbances	10 V 0.15...80 MHz IEC 61000-4-6 3 V spot frequency (2, 3, 4, 6.2, 8.2, 12.6, 16.5, 18.8, 22, 25 MHz) Marine specification (LR, ABS, DNV, GL)
Electromagnetic Emission	Radiated emissions 40 dBµV/m QP class A 10 m)30…230 MHz IEC 55011 Radiated emissions 47 dBµV/m QP class A 10 m)230…1000 MHz IEC 55011
Ambient Air Temperature For Operation	14…95 °F (-10…35 °C) vertical installation 14…131 °F (-10…55 °C) horizontal installation
Ambient Air Temperature For Storage	-13…158 °F (-25…70 °C)
Relative Humidity	10…95 %, without condensation in operation) 10…95 %, without condensation in storage)
Ip Degree Of Protection	IP20 with protective cover in place
Pollution Degree	2
Operating Altitude	0...6561.68 ft (0...2000 m)
Storage Altitude	0.00…9842.52 ft (0…3000 m)
Vibration Resistance	3.5 mm 5…8.4 Hz DIN rail 3 gn 8.4…150 Hz DIN rail 3.5 mm 5…8.4 Hz panel 3 gn 8.4…150 Hz panel
Shock Resistance	15 gn 11 ms

Ordering and shipping details

Category	US10MSX22533
Discount Schedule	0MSX
Gtin	3606480611629
Returnability	Yes
Country Of Origin	TW

Packing Units

Unit Type Of Package 1	PCE
Number Of Units In Package 1	1
Package 1 Height	2.95 in (7.5 cm)
Package 1 Width	4.13 in (10.5 cm)
Package 1 Length	4.92 in (12.5 cm)

Package 1 Weight	8.11 oz (230.0 g)
Unit Type Of Package 2	S04
Number Of Units In Package 2	42
Package 2 Height	11.81 in (30.0 cm)
Package 2 Width	15.75 in (40.0 cm)
Package 2 Length	23.62 in (60.0 cm)
Package 2 Weight	21.78 lb(US) (9.88 kg)

Sustainability

Green Premium™ label is Schneider Electric's commitment to delivering products with best-in-class environmental performance. Green Premium promises compliance with the latest regulations, transparency on environmental impacts, as well as circular and low-CO_2 products.

Guide to assessing product sustainability is a white paper that clarifies global eco-label standards and how to interpret environmental declarations.

Learn more about Green Premium >

Guide to assess a product's sustainability >

Transparency RoHS/REACh

Well-being performance

Reach Free Of Svhc	
Toxic Heavy Metal Free	
Mercury Free	
Rohs Exemption Information	Yes
Pvc Free	

Certifications & Standards

Reach Regulation	REACh Declaration
Eu Rohs Directive	Pro-active compliance (Product out of EU RoHS legal scope) EU RoHS Declaration
China Rohs Regulation	China RoHS declaration
Environmental Disclosure	Product Environmental Profile
Weee	The product must be disposed on European Union markets following specific waste collection and never end up in rubbish bins.
Circularity Profile	End of Life Information
California Proposition 65	WARNING: This product can expose you to chemicals including: Lead and lead compounds, which is known to the State of California to cause cancer and birth defects or other reproductive harm. For more information go to www.P65Warnings.ca.gov

Dimensions Drawings

Dimensions

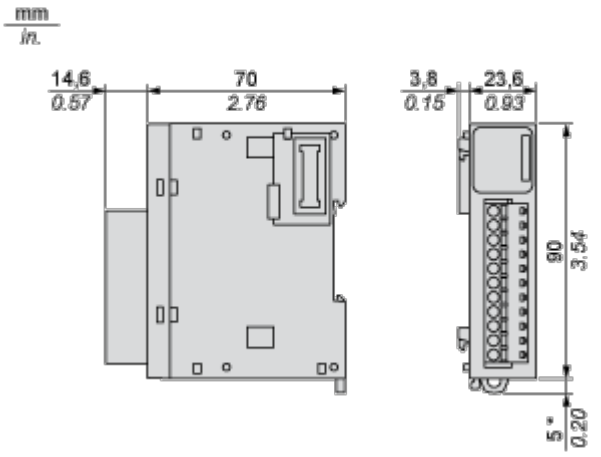

(*) 8.5 mm/0.33 in. when the clamp is pulled out.

Mounting and Clearance

Spacing Requirements

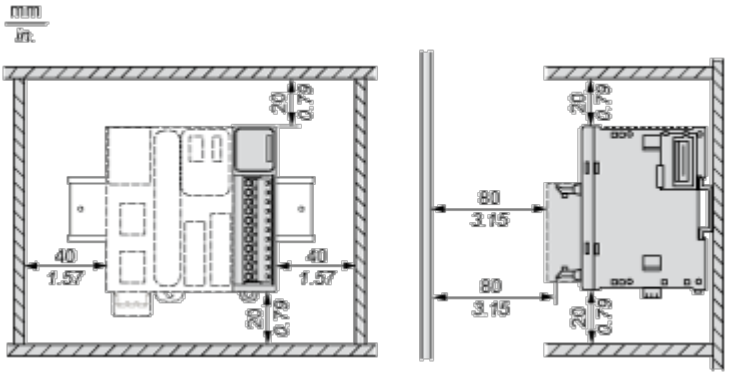

Mounting on a Rail

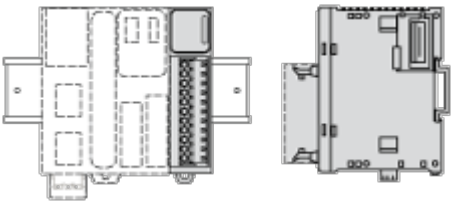

Incorrect Mounting

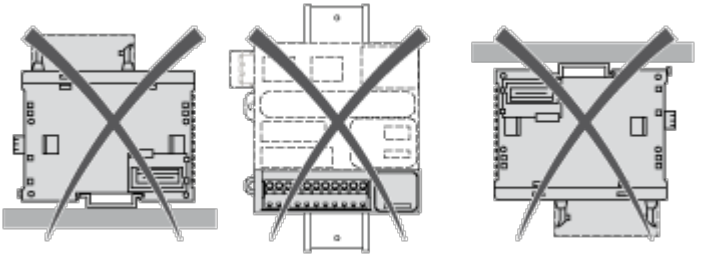

Mounting on a Panel Surface

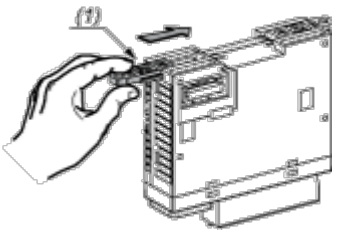

(1) Install a mounting strip

Mounting Hole Layout

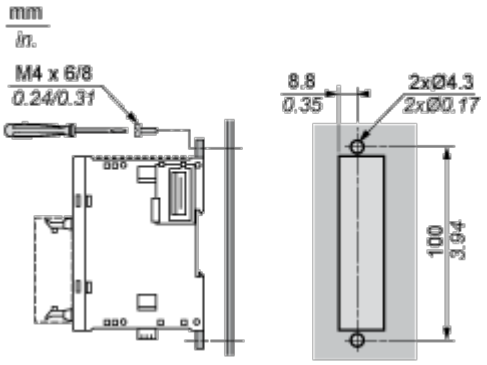

Connections and Schema

Digital Input Module (8-channel, 120 Vac)

Wiring Diagram

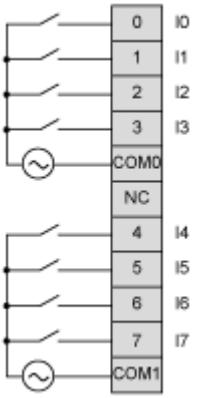

The COM0 and COM1 terminal are **not** connected internally.