Product data sheet

Specifications

IO analog module, Modicon TM3, 4 inputs, 2 output, spring, 24V DC

TM3AM6G

Product availability: Stock - Normally stocked in distribution facility

Price*: 285.00 USD

Main

Range Of Product	Modicon TM3
Product Or Component Type	Input/output analog module
Range Compatibility	Modicon M221 Modicon M241 Modicon M251 Modicon M262
Analogue Input Number	4
Analogue Input Type	current 4...20 mA current 0...20 mA voltage 0...10 V voltage - 10...10 V
Analogue Output Number	2
Analogue Output Type	Current 4...20 mA Current 0...20 mA Voltage 0...10 V Voltage - 10...10 V

Complementary

Analogue Input Resolution	12 bits 11 bits + sign
Permissible Continuous Overload	13 V voltage 40 mA current
Input Impedance	<= 50 Ohm current >= 1 MOhm voltage
Analogue Output Resolution	12 bits 11 bits + sign
Lsb Value	2.44 mV 0...10 V voltage 4.88 mV - 10...10 V voltage 4.88 µA 0...20 mA current 3.91 µA 4...20 mA current
Load Type	Resistive
Load Impedance Ohmic	1 kOhm voltage 300 Ohm current
Stabilisation Time	1 ms
Conversion Time	1 ms + 1 ms per channel + 1 controller cycle time
Sampling Duration	1 ms 10 ms
Absolute Accuracy Error	+/- 1 % of full scale +/- 0.2 % of full scale at 77 °F (25 °C)
Temperature Drift	+/- 0.01 %FS/°C

Price is “List Price” and may be subject to a trade discount – check with your local distributor or retailer for actual price.

Disclaimer: This documentation is not intended as a substitute for and is not to be used for determining suitability or reliability of these products for specific user applications

Repeat Accuracy	+/-0.5 %FS input +/-0.5 %FS output
Non-Linearity	+/- 0.2 %FS
Output Ripple	20 mV
Cross Talk	<= 1 LSB
[Us] Rated Supply Voltage	24 V DC
Supply Voltage Limits	20.4…28.8 V
Type Of Cable	Twisted shielded pairs cable <98.43 ft (30 m) input/output
Current Consumption	45 mA 5 V DC via bus connector no load 55 mA 5 V DC via bus connector full load 55 mA 24 V DC via external supply no load 100 mA 24 V DC via external supply full load
Local Signalling	for PWR 1 LED (green)
Electrical Connection	10 x 1.5 mm² removable spring terminal block pitch 3.81 mm for inputs 10 x 1.5 mm² removable spring terminal block pitch 3.81 mm for inputs, outputs and supply
Insulation	Between input and supply 1500 V AC Between input and internal logic 500 V AC Between output and supply 1500 V AC Between output and internal logic 500 V AC
Marking	CE
Surge Withstand	1 kV power supply common mode IEC 61000-4-5 0.5 kV power supply differential mode IEC 61000-4-5 1 kV I/O common mode IEC 61000-4-5 0.5 kV I/O differential mode IEC 61000-4-5
Mounting Support	Top hat type TH35-15 rail IEC 60715 Top hat type TH35-7.5 rail IEC 60715 plate or panel with fixing kit
Height	3.54 in (90 mm)
Depth	2.76 in (70 mm)
Width	0.93 in (23.6 mm)
Net Weight	0.22 lb(US) (0.1 kg)

Environment

Standards	IEC 61131-2
Product Certifications	CE UKCA RCM EAC cULus cULus HazLoc
Resistance To Electrostatic Discharge	8 kV in air IEC 61000-4-2 4 kV on contact IEC 61000-4-2
Resistance To Electromagnetic Fields	9.14 V/m (10 V/m) 80 MHz...1 GHz IEC 61000-4-3 2.74 V/m (3 V/m) 1.4 GHz...2 GHz IEC 61000-4-3 0.91 V/m (1 V/m) 2 GHz...3 GHz IEC 61000-4-3
Resistance To Magnetic Fields	98.43 A/m (30 A/m) IEC 61000-4-8
Resistance To Fast Transients	1 kV IEC 61000-4-4 I/O)
Resistance To Conducted Disturbances	10 V 0.15...80 MHz IEC 61000-4-6 3 V spot frequency (2, 3, 4, 6.2, 8.2, 12.6, 16.5, 18.8, 22, 25 MHz) Marine specification (LR, ABS, DNV, GL)
Electromagnetic Emission	Radiated emissions 40 dBµV/m QP class A 10 m)30…230 MHz IEC 55011 Radiated emissions 47 dBµV/m QP class A 10 m)230…1000 MHz IEC 55011

Immunity To Microbreaks	10 ms
Ambient Air Temperature For Operation	14…131 °F (-10…55 °C) horizontal installation 14…95 °F (-10…35 °C) vertical installation
Ambient Air Temperature For Storage	-13…158 °F (-25…70 °C)
Relative Humidity	10…95 %, without condensation in operation) 10…95 %, without condensation in storage)
Ip Degree Of Protection	IP20
Pollution Degree	2
Operating Altitude	0...6561.68 ft (0...2000 m)
Storage Altitude	0.00…9842.52 ft (0…3000 m)
Vibration Resistance	3.5 mm 5…8.4 Hz DIN rail 3 gn 8.4…150 Hz DIN rail
Shock Resistance	15 gn 11 ms

Ordering and shipping details

Category	US10MSX22533
Discount Schedule	0MSX
Gtin	3606480648953
Returnability	Yes
Country Of Origin	US

Packing Units

Unit Type Of Package 1	PCE
Number Of Units In Package 1	1
Package 1 Height	2.95 in (7.5 cm)
Package 1 Width	4.92 in (12.5 cm)
Package 1 Length	4.13 in (10.5 cm)
Package 1 Weight	6.88 oz (195.0 g)
Unit Type Of Package 2	S02
Number Of Units In Package 2	9
Package 2 Height	5.91 in (15 cm)
Package 2 Width	11.81 in (30 cm)
Package 2 Length	15.75 in (40 cm)
Package 2 Weight	5.06 lb(US) (2.294 kg)
Unit Type Of Package 3	P12
Number Of Units In Package 3	144
Package 3 Height	29.53 in (75 cm)
Package 3 Width	47.24 in (120 cm)
Package 3 Length	31.50 in (80 cm)
Package 3 Weight	101.41 lb(US) (46 kg)

Sustainability

Green Premium™ label is Schneider Electric's commitment to delivering products with best-in-class environmental performance. Green Premium promises compliance with the latest regulations, transparency on environmental impacts, as well as circular and low-CO_2 products.

Guide to assessing product sustainability is a white paper that clarifies global eco-label standards and how to interpret environmental declarations.

Learn more about Green Premium >

Guide to assess a product's sustainability >

Transparency RoHS/REACh

Well-being performance

Toxic Heavy Metal Free	
Mercury Free	
Rohs Exemption Information	Yes
Pvc Free	

Certifications & Standards

Reach Regulation	REACh Declaration
Eu Rohs Directive	Pro-active compliance (Product out of EU RoHS legal scope) EU RoHS Declaration
China Rohs Regulation	China RoHS declaration
Environmental Disclosure	Product Environmental Profile
Weee	The product must be disposed on European Union markets following specific waste collection and never end up in rubbish bins.
Circularity Profile	End of Life Information
California Proposition 65	WARNING: This product can expose you to chemicals including: Lead and lead compounds, which is known to the State of California to cause cancer and birth defects or other reproductive harm. For more information go to www.P65Warnings.ca.gov

Dimensions Drawings

Dimensions

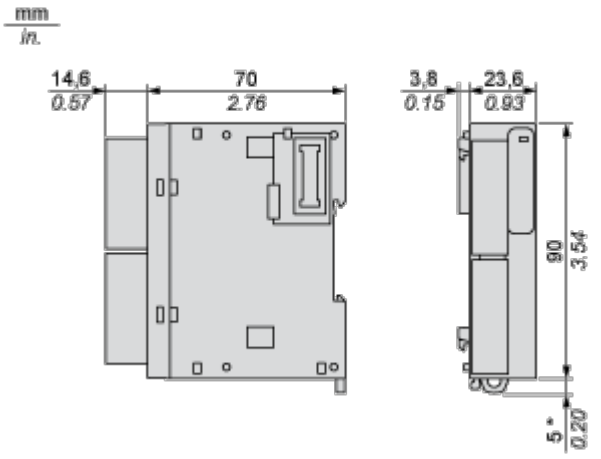

(*) 8.5 mm/0.33 in when the clamp is pulled out.

Mounting and Clearance

Spacing Requirements

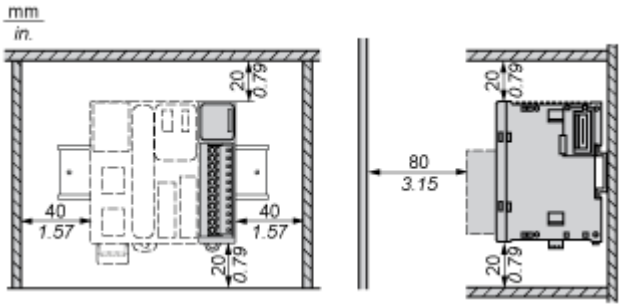

Mounting on a Rail

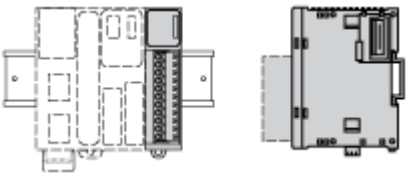

Incorrect Mounting

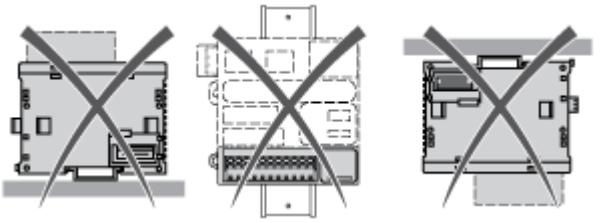

Mounting on a Panel Surface

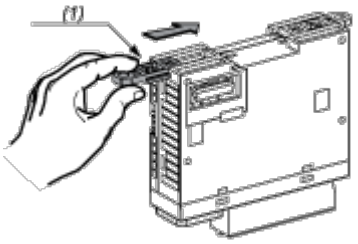

(1) Install a mounting strip

Mounting Hole Layout

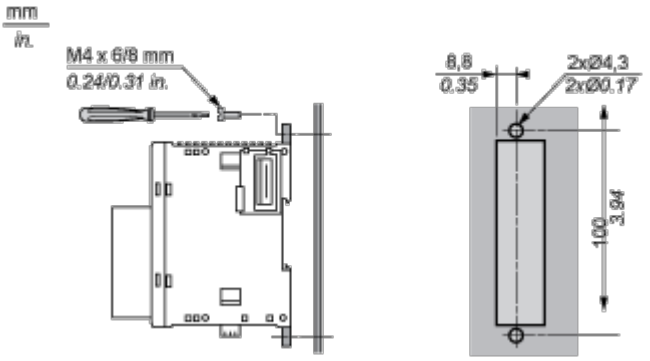

Connections and Schema

Analogue Mixed I/O Module

Wiring Diagram (Current / Voltage)

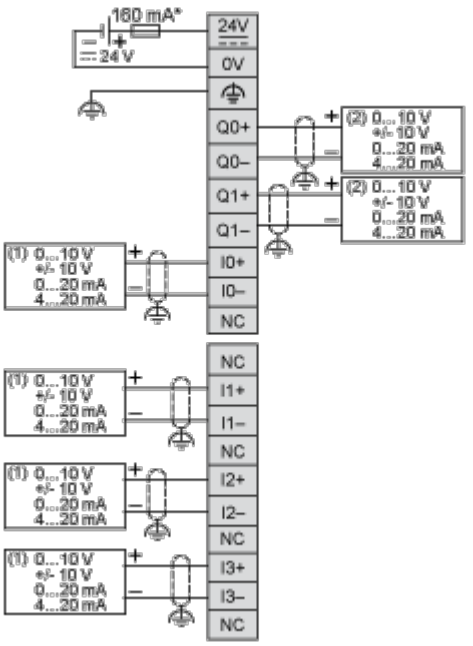

(*) Type T fuse

(1) Current/Voltage analog output device

(2) Current/Voltage analog input device