Product data sheet

Specifications

EEV Driver, Autonomous & Modbus

TM171VEVM4

Product availability: Non-Stock - Not normally stocked in distribution facility

Price*: 140.00 USD

Main

Range Of Product	Modicon M171
Product Or Component Type	Controller

Complementary

Number Of Port	1 Modbus serial link - RS485
Input/Output Number	8 total) 4 analog input 2 digital input 2 digital output
Discrete Input Number	2
Discrete Input Logic	Sink or source (positive/negative)
Contacts Usage	Volt-free contacts
Sensor Power Supply	5 V DC 12 V DC
Discrete Output Number	1 open collector 1 SPST
Analogue Input Number	2 analog input NTC 2 analog input Pt 1000 4...20 mA or 0...5 V or 0...10 V
[Us] Rated Supply Voltage	24 V +/- 10 % AC/DC
Display Type	Without Display
Mounting Support	DIN rail
Width	2.76 in (70.2 mm)
Height	3.43 in (87 mm)
Depth	2.43 in (61.6 mm)

Environment

Marking	CE
Ambient Air Temperature For Operation	23…122 °F (-5…50 °C)
Ip Degree Of Protection	IP20

Ordering and shipping details

Category	US1PC1222537
Discount Schedule	PC12
Gtin	3606480752902

Price is “List Price” and may be subject to a trade discount – check with your local distributor or retailer for actual price.

Disclaimer: This documentation is not intended as a substitute for and is not to be used for determining suitability or reliability of these products for specific user applications

Returnability	Yes
Country Of Origin	US

Packing Units

Unit Type Of Package 1	PCE
Number Of Units In Package 1	1
Package 1 Height	5.31 in (13.500 cm)
Package 1 Width	3.58 in (9.100 cm)
Package 1 Length	7.28 in (18.500 cm)
Package 1 Weight	10.93 oz (310.000 g)
Unit Type Of Package 2	S02
Number Of Units In Package 2	6
Package 2 Height	5.91 in (15.000 cm)
Package 2 Width	11.81 in (30.000 cm)
Package 2 Length	15.75 in (40.000 cm)
Package 2 Weight	4.71 lb(US) (2.138 kg)

Sustainability

Green Premium™ label is Schneider Electric's commitment to delivering products with best-in-class environmental performance. Green Premium promises compliance with the latest regulations, transparency on environmental impacts, as well as circular and low-CO_2 products.

Guide to assessing product sustainability is a white paper that clarifies global eco-label standards and how to interpret environmental declarations.

Learn more about Green Premium >

Guide to assess a product's sustainability >

Transparency RoHS/REACh

Resource performance

Upgradeable Through Digital Modules And Upgraded Components

Well-being performance

Mercury Free

Rohs Exemption Information Yes

Certifications & Standards

Reach Regulation	REACh Declaration
Eu Rohs Directive	Pro-active compliance (Product out of EU RoHS legal scope)
China Rohs Regulation	China RoHS declaration
Environmental Disclosure	Product Environmental Profile
Weee	The product must be disposed on European Union markets following specific waste collection and never end up in rubbish bins.
Circularity Profile	End of Life Information
California Proposition 65	WARNING: This product can expose you to chemicals including: Lead and lead compounds, which is known to the State of California to cause cancer and birth defects or other reproductive harm. For more information go to www.P65Warnings.ca.gov

Mounting and Clearance

Mounting and Clearance

DIN Rail Mounting

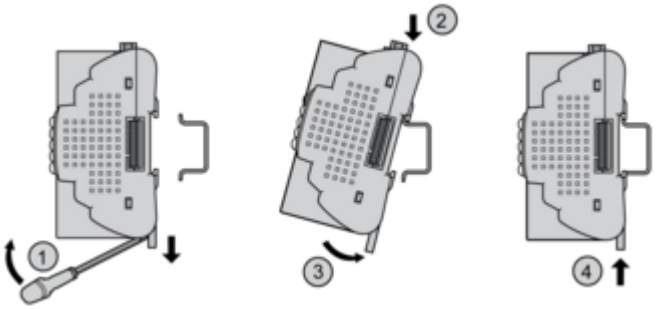

Clips for Panel Mounting

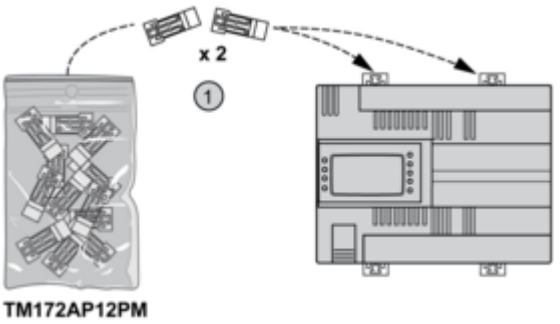

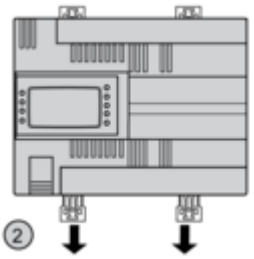

Panel Mounting

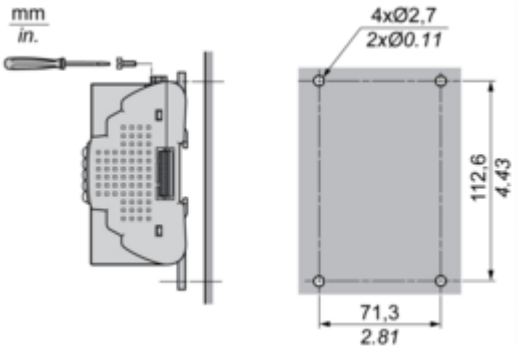

Clearance

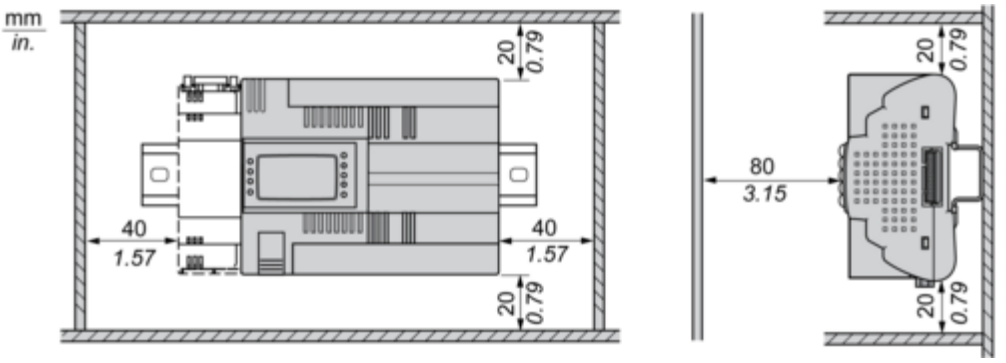

Incorrect Mounting Position

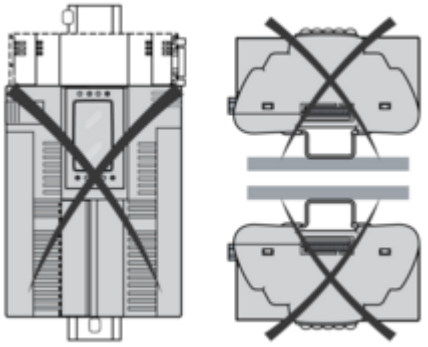

Assembling a Module

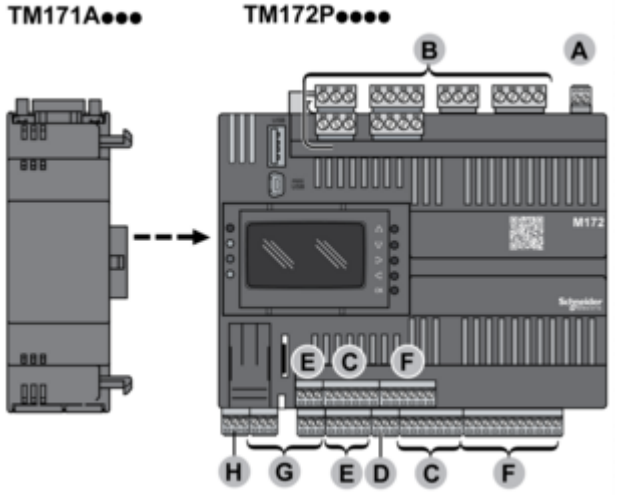

Wiring Sections and Torque

A, C, D, E, F, G, H

mm / in. 9 / 0.35								
mm²	0.14…1.5	0.14…1.5	0.25…1.5	0.25…0.5	2 x 0.08…0.5	2 x 0.08…0.75	2 x 0.25…0.34	2 x 0.5
AWG	26…16	26…16	22…16	22…20	2 x 28…20	2 x 28…20	2 x 24…22	2 x 20

Ø 2,5 mm (0.1 in.)	C	N•m	0.22...0.25
		lb-in	1.95...2.21

B

mm / in. 7 / 0.28								
mm²	0.2...2.5	0.2...2.5	0.25...2.5	0.25...2.5	2 x 0.2...1	2 x 0.2...1.5	2 x 0.25...1	2 x 0.5...1.5
AWG	*24...14*	*24...14*	*22...14*	*22...14*	*2 x 24...18*	*2 x 24...16*	*2 x 22...18*	*2 x 20...16*

Ø 3,5 mm (*0.14 in.*)	C	N•m	0.5...0.6
		lb-in	*4.42...5.31*

Connections and Schema

Power Supply

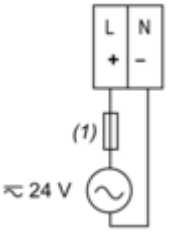

(1) Type T fuse 3,15 A

Wiring Diagram

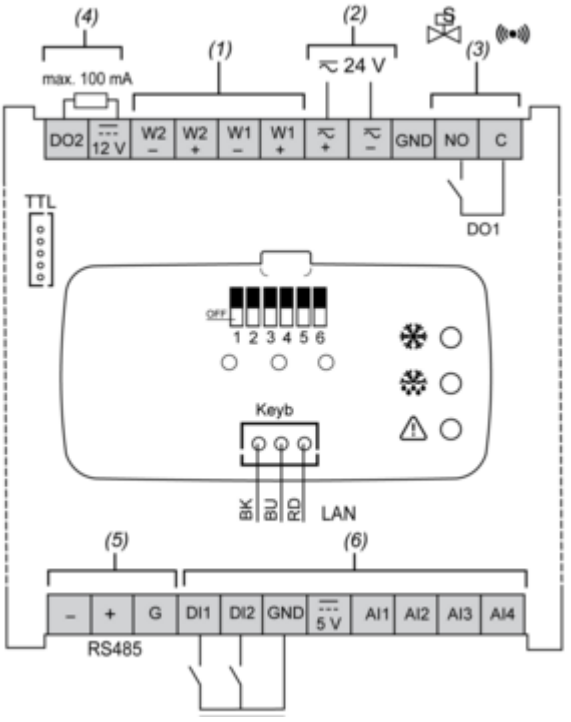

(1)	Electronic Expansion Valve output
(2)	Power supply 24 V ac/dc
(3)	DO1: Relay output 5 A 250 Vac (Solenoid valve/Alarm) C: Common - NO: Normally Open
(4)	DO2: Open collector (Solenoid valve/Alarm)
(5)	Serial port RS485
(6)	Digital and analog inputs GND - Ground