Product data sheet

Specifications

Controller, Modicon M171/172/173, optimized blind 22 IO, Modbus

TM171OBM22R

Product availability: Non-Stock - Not normally stocked in distribution facility

Price*: 167.28 USD

Main

Range Of Product	Modicon M171/M172
Product Or Component Type	Controller
Product Specific Application	HVAC and pumping solution
Variant	Programmable
Total Inputs/Outputs	22
Discrete Input Number	6
Discrete Output Number	1 open collector 3 relay outputs SPST with same common 2 relay outputs SPST with independent common
Discrete Output Current	2 A relay
Analogue Input Number	2 configurable 3 analog input NTC
Analogue Output Number	3 voltage 0...10 V 2 PWM/PPM 20 kHz, 12 V, 35 mA

Complementary

Number Of Port	1 LAN expansion bus 1 RS485 - screw terminal block Modbus serial link)
Input/Output Number	5 analog output 6 digital input 5 analog input 6 digital output
Discrete Input Logic	Sink or source (positive/negative)
Contacts Usage	Volt-free contacts
Analogue Input Type	voltage 0...5 V ratiometric) voltage 0...10 V current 0...20 mA/4...20 mA voltage 0...1 V temperature probe - 50...100 °C 0.1 °C
Sensor Power Supply	12 V DC 85 mA 5 V DC 20 mA
[Us] Rated Supply Voltage	24 V 12...24 V AC
Realtime Clock	Built-in clock at -4…131 °F (-20…55 °C)
Display Type	Four 7-segment display units
Overvoltage Category	II

Price is “List Price” and may be subject to a trade discount – check with your local distributor or retailer for actual price.

Disclaimer: This documentation is not intended as a substitute for and is not to be used for determining suitability or reliability of these products for specific user applications

Local Signalling	6 LEDs (red) 5 LEDs (green) for programmable 7 LEDs (amber)
Mounting Support	DIN rail
Width	2.76 in (70.2 mm)
Height	3.43 in (87 mm)
Depth	2.43 in (61.6 mm)
Net Weight	0.42 lb(US) (0.19 kg)

Environment

Directives	2006/95/EC - low voltage directive 86/188/EEC - physical agents (noise) directive
Standards	EN 60730-1 UL 60730-1 IEC 61000-4-6 IEC 61000-4-3 UL 60730-2-9 IEC 61000-4-4 IEC 61000-4-2 CSA E60730-2-9 IEC 61000-4-5 EN 60068-2-6 Fc IEC 61000-4-11 EN 60730-2-9 EN 60068-2-27 CAN/CSA-E60730-1 UL94 (material V0)
Product Certifications	EAC CSA RCM CE cURus
Ambient Air Temperature For Operation	-4…131 °F (-20…55 °C) UL 60730-1
Ambient Air Temperature For Storage	-40…185 °F (-40…85 °C)
Relative Humidity	10…90 % non-condensing
Ip Degree Of Protection	IP20
Pollution Degree	2

Ordering and shipping details

Category	US1PC1222537
Discount Schedule	PC12
Gtin	3606480752742
Returnability	No
Country Of Origin	US

Packing Units

Unit Type Of Package 1	PCE
Number Of Units In Package 1	1
Package 1 Height	5.20 in (13.200 cm)
Package 1 Width	3.54 in (9.000 cm)
Package 1 Length	7.28 in (18.500 cm)
Package 1 Weight	8.85 oz (251.000 g)

Unit Type Of Package 2	S02
Number Of Units In Package 2	6
Package 2 Height	5.91 in (15.000 cm)
Package 2 Width	11.81 in (30.000 cm)
Package 2 Length	15.75 in (40.000 cm)
Package 2 Weight	3.81 lb(US) (1.726 kg)

Sustainability

Green Premium™ label is Schneider Electric's commitment to delivering products with best-in-class environmental performance. Green Premium promises compliance with the latest regulations, transparency on environmental impacts, as well as circular and low-CO_2 products.

Guide to assessing product sustainability is a white paper that clarifies global eco-label standards and how to interpret environmental declarations.

Learn more about Green Premium >

Guide to assess a product's sustainability >

Transparency RoHS/REACh

Resource performance

Upgradeable Through Digital Modules And Upgraded Components

Well-being performance

Mercury Free

Rohs Exemption Information	Yes

Certifications & Standards

Reach Regulation	REACh Declaration
Eu Rohs Directive	Pro-active compliance (Product out of EU RoHS legal scope)
China Rohs Regulation	China RoHS declaration
Environmental Disclosure	Product Environmental Profile
Weee	The product must be disposed on European Union markets following specific waste collection and never end up in rubbish bins.
Circularity Profile	End of Life Information
California Proposition 65	WARNING: This product can expose you to chemicals including: Lead and lead compounds, which is known to the State of California to cause cancer and birth defects or other reproductive harm. For more information go to www.P65Warnings.ca.gov

Dimensions Drawings

Dimensions

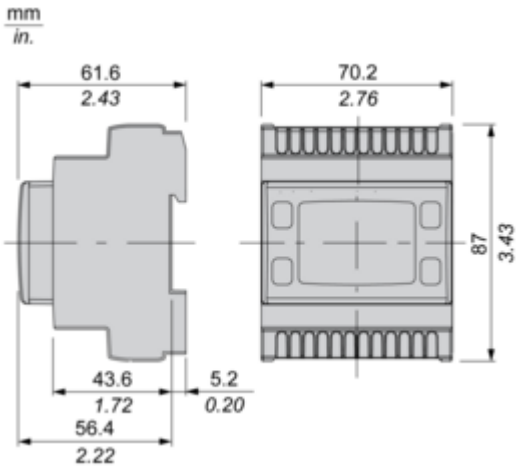

Mounting and Clearance

Mounting and Clearance

Clearance

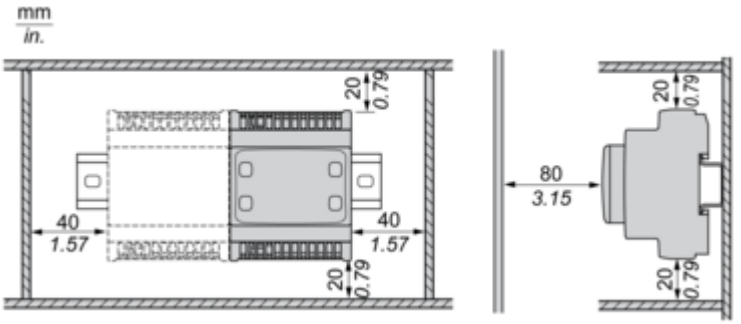

Misplacement

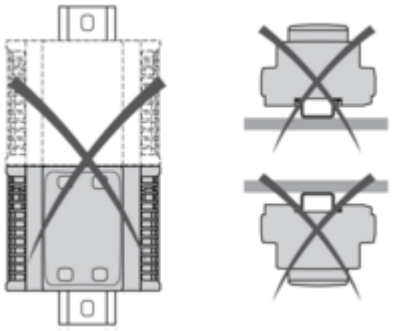

Connections and Schema

Power Supply

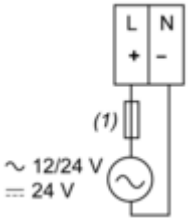

(1) Type T fuse (Controller: 1.25 A , Expansion: 1 A)

Wiring Diagram

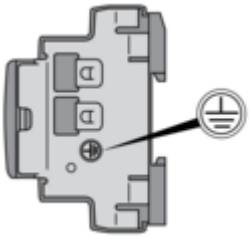

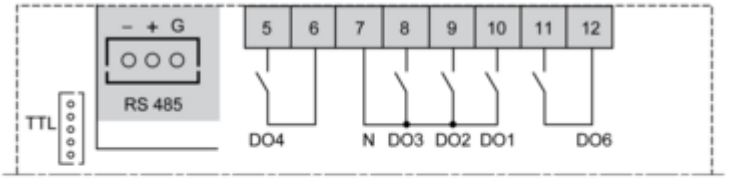

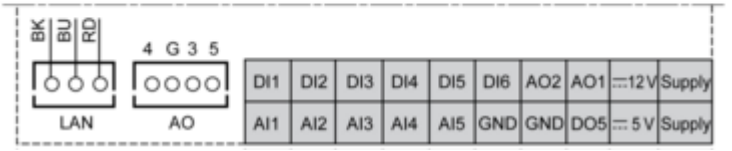

N : Neutral
GND : Ground
BK : Black
BU : Blue
RD : Red
AI : Analogue input
AO : Analogue output
DI : Digital input
DO : Digital output