Product data sheet

Specifications

heat sink, Harmony Solid State Relays, thermal resistance 0.7 degree C W

SSRHP07

Product availability: Stock - Normally stocked in distribution facility

Price*: 26.00 USD

Main

Range Of Product	Harmony Solid State Relays
Product Or Component Type	Heat sink

Complementary

Product Compatibility	1 solid state relay SSR panel
Thermal Resitance	0.7 °C/W
Mounting Support	Panel
Material	Aluminium
Surface Finish	Black anodized
Surface And Useful Surface	254.20 in² (1640 cm²)
Number Of Mounting Holes	6 UNC 8-32
Tightening Torque	15.05…19.47 lbf.in (1.7…2.2 N.m)
Sale Per Indivisible Quantity	1
Width	5.50 in (139.7 mm)
Height	4.75 in (120.7 mm)
Depth	2.63 in (66.8 mm)
Net Weight	0.02 oz (0.526 g)

Ordering and shipping details

Category	US10CP222375
Discount Schedule	0CP2
Gtin	3606485442198
Returnability	Yes
Country Of Origin	CN

Packing Units

Unit Type Of Package 1	PCE
Number Of Units In Package 1	1
Package 1 Height	2.63 in (6.68 cm)
Package 1 Width	4.75 in (12.07 cm)

Price is “List Price” and may be subject to a trade discount – check with your local distributor or retailer for actual price.

Disclaimer: This documentation is not intended as a substitute for and is not to be used for determining suitability or reliability of these products for specific user applications

Package 1 Length	5.50 in (13.97 cm)
Package 1 Weight	21.41 oz (607.0 g)
Unit Type Of Package 2	S03
Number Of Units In Package 2	12
Package 2 Height	11.81 in (30.0 cm)
Package 2 Width	11.81 in (30.0 cm)
Package 2 Length	15.75 in (40.0 cm)
Package 2 Weight	16.07 lb(US) (7.29 kg)

Sustainability

Green Premium™ label is Schneider Electric's commitment to delivering products with best-in-class environmental performance. Green Premium promises compliance with the latest regulations, transparency on environmental impacts, as well as circular and low-CO_2 products.

Guide to assessing product sustainability is a white paper that clarifies global eco-label standards and how to interpret environmental declarations.

Learn more about Green Premium >

Guide to assess a product's sustainability >

RoHS/REACh

Well-being performance

Reach Free Of Svhc	
Toxic Heavy Metal Free	
Mercury Free	
Rohs Exemption Information	Yes

Certifications & Standards

Reach Regulation	REACh Declaration
Eu Rohs Directive	Pro-active compliance (Product out of EU RoHS legal scope) EU RoHS Declaration
China Rohs Regulation	China RoHS declaration
Circularity Profile	No need of specific recycling operations
California Proposition 65	WARNING: This product can expose you to chemicals including: Nickel compounds, which is known to the State of California to cause cancer, and Di-isodecyl phthalate (DIDP), which is known to the State of California to cause birth defects or other reproductive harm. For more information go to www.P65Warnings.ca.gov

Dimensions Drawings

Dimensions

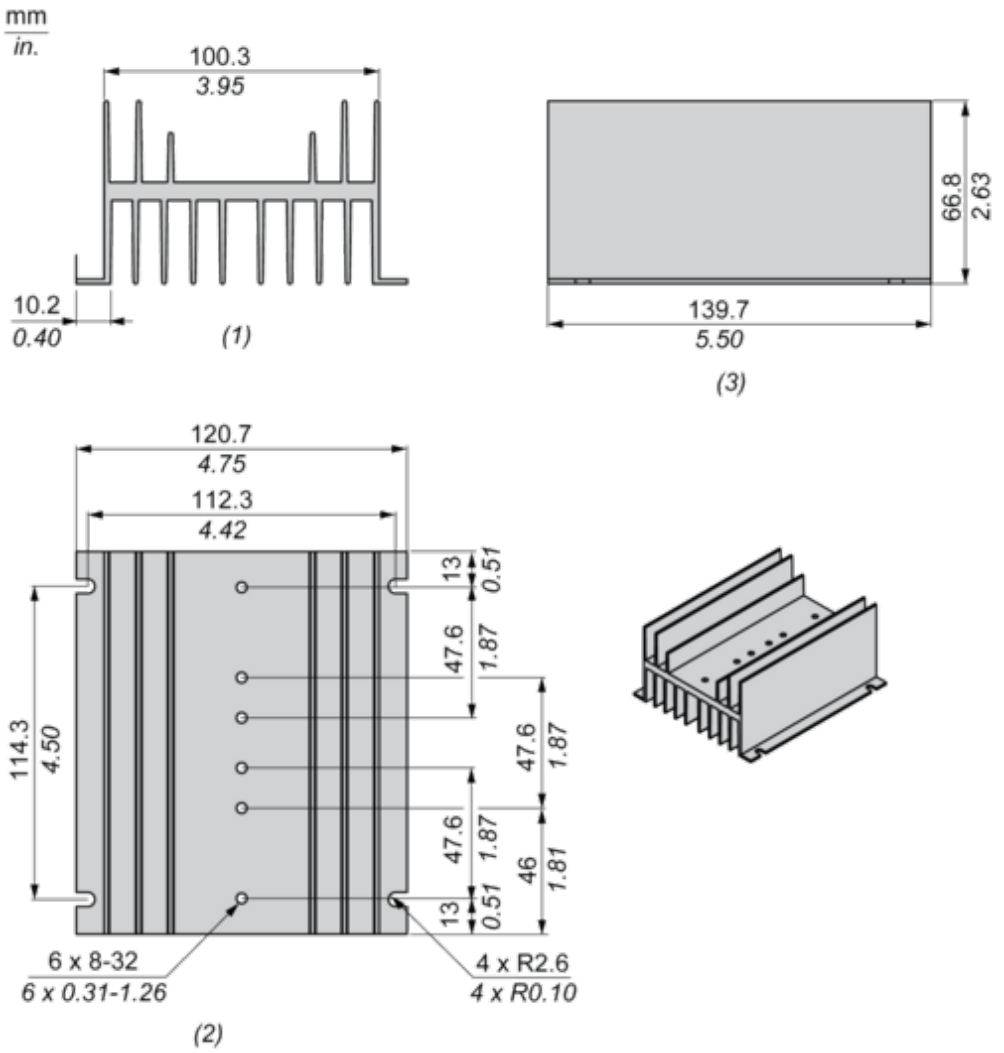

(1) Front view
(2) Top view
(3) Side view