Product data sheet

Specifications

Harmony, Solid state relay, 125 A, panel mount, zero voltage switching, thermal pad and smart diagnostic, input 4...32 V DC, output 48â€¦660 V AC

SSP1A4125BDS

Product availability: Stock - Normally stocked in distribution facility

Price*: 124.23 USD

Main

Range Of Product	Harmony Solid State Relays
Provided Accessory	Thermal pad
Product Or Component Type	Solid state relay up to 125 A
Device Short Name	SSP1
Mounting Support	Panel
Number Of Phases	1 phase
Line Rated Current	125 A
Solid State Output Type	SCR output Zero voltage switching
Output Switching Mode	Zero voltage switching

Complementary

Minimum Switching Voltage	4 V DC turn-on
Maximum Switching Voltage	1 V DC turn-off
Response Time	0.5 cycle (turn-on) 0.5 cycle (turn-off)
Input Current	7…12 mA
Load Current	0.15…125 A
Transient Overvoltage	1200 V
Surge Current	1750 A 16.6 ms
Maximum I^2T For Fusing	12709 A^2.s for 8.33 ms at 60 Hz 13950 A^2.s for 10 ms at 50 Hz
Co-Ordination Type	Type 1 - 80 A miniature circuit breaker (MCB) B Type 2 - 63 A miniature circuit breaker (MCB) B
Maximum Leakage Current	1 mA off-state
Maximum Voltage Drop	<1.15 V on-state
Dv/Dt	500 V/µs off-state at maximum voltage
Power Factor	0.5 (with maximum load)
Motor Controller Rating	2 hp 120 V AC 5 hp 240 V AC 10 hp 480 V AC

Price is “List Price” and may be subject to a trade discount – check with your local distributor or retailer for actual price.

Disclaimer: This documentation is not intended as a substitute for and is not to be used for determining suitability or reliability of these products for specific user applications

Insulation Resistance	1000 MOhm at 500 V DC
Maximum Capacitance	8 pF for input/output
Dielectric Strength	4 kV AC for input/output 4 kV AC for input or output to case
[Uimp] Rated Impulse Withstand Voltage	6 kV output to case 6 kV input to output
Tightening Torque	1.5...1.7 N.m for input 2...2.2 N.m for output 17.7...19.47 lb.in for output 13.27...15.04 lb.in for input 0.5...0.6 N.m for auxillary terminal 4.4...5.3 lb.in for auxillary terminal
Connections - Terminals	Screw terminals 0.2...3.3 mm², AWG 24...AWG 12) with cable end input Screw terminals 0.5...5.26 mm², AWG 20...AWG 10) with cable end output Screw terminals 0.2...3.3 mm², AWG 24...AWG 12) without cable end input Screw terminals 0.5...8.26 mm², AWG 20...AWG 8) without cable end output Forked type tag connectors 9.2 x 4 mm input Ring lugs 9.2 x 4 mm input Forked type tag connectors 11.7 x 4.5 mm output Ring lugs 11.7 x 4.5 mm output
Auxiliary/Alarm Connection Terminal	Screw-type connector, 0.5...1.5 mm² AWG 20...AWG 16)slotted Philips
Thermal Resistance	0.22 °C/W junction to case
Led Indicator	LED, steady, green ON status control input/test button actuated LED, steady, amber ON status load LED, flashing, amber control input to energise load LED, steady, red open-circuit control input LED, flashing, red load cut-off/short-circuit
Maximum Alarm Output Current	30 mA 32 V DC
Minimum Load Current	150 mA
Ip Degree Of Protection	IP20
Electromagnetic Compatibility	Electrostatic discharge 6 kV criteria A contact discharge conforming to IEC 61000-4-2 Electrostatic discharge 8 kV criteria A air discharge conforming to IEC 61000-4-2 Radiated radio-frequency electromagnetic field immunity test criteria A output ports conforming to IEC 61000-4-3 Radiated radio-frequency electromagnetic field immunity test criteria B alarm port conforming to IEC 61000-4-3 Electrical fast transient/burst immunity test 1 kV, 5/100 kHz criteria B output ports conforming to IEC 61000-4-4 Surge immunity test 1 kV criteria A output ports line to line conforming to IEC 61000-4-5 Surge immunity test 2 kV criteria A output ports line to earth conforming to IEC 61000-4-5
Safety Reliability Data	MTTFd = 1875.9 years B10d = 1731395
Net Weight	3.43 oz (97.1 g)
Device Presentation	Complete product

Environment

Ambient Air Temperature For Operation	-40…176 °F (-40…80 °C)
Ambient Air Temperature For Storage	-40…257 °F (-40…125 °C)
Pollution Degree	2
Overvoltage Category	III
Product Certifications	CE EAC UL CSA

Marking	CE EAC CSA UL
Standards	CSA C22.2 No 14-13 IEC 62314 UL 508 IEC 60950-1

Ordering and shipping details

Category	US10CP222375
Discount Schedule	0CP2
Gtin	3606485442273
Returnability	Yes
Country Of Origin	US

Packing Units

Unit Type Of Package 1	PCE
Number Of Units In Package 1	1
Package 1 Height	1.89 in (4.8 cm)
Package 1 Width	1.85 in (4.7 cm)
Package 1 Length	2.60 in (6.6 cm)
Package 1 Weight	4.02 oz (114.0 g)
Unit Type Of Package 2	S01
Number Of Units In Package 2	28
Package 2 Height	5.91 in (15.0 cm)
Package 2 Width	5.91 in (15.0 cm)
Package 2 Length	15.75 in (40.0 cm)
Package 2 Weight	7.74 lb(US) (3.511 kg)

Sustainability

Green Premium™ label is Schneider Electric's commitment to delivering products with best-in-class environmental performance. Green Premium promises compliance with the latest regulations, transparency on environmental impacts, as well as circular and low-CO_2 products.

Guide to assessing product sustainability is a white paper that clarifies global eco-label standards and how to interpret environmental declarations.

Learn more about Green Premium >

Guide to assess a product's sustainability >

Transparency RoHS/REACh

Well-being performance

Mercury Free

Rohs Exemption Information Yes

Certifications & Standards

Reach Regulation	REACh Declaration
Eu Rohs Directive	Pro-active compliance (Product out of EU RoHS legal scope)
China Rohs Regulation	China RoHS declaration
Environmental Disclosure	Product Environmental Profile
Circularity Profile	End of Life Information
California Proposition 65	WARNING: This product can expose you to chemicals including: Lead and lead compounds, which is known to the State of California to cause cancer and birth defects or other reproductive harm. For more information go to www.P65Warnings.ca.gov

Dimensions Drawings

Dimensions

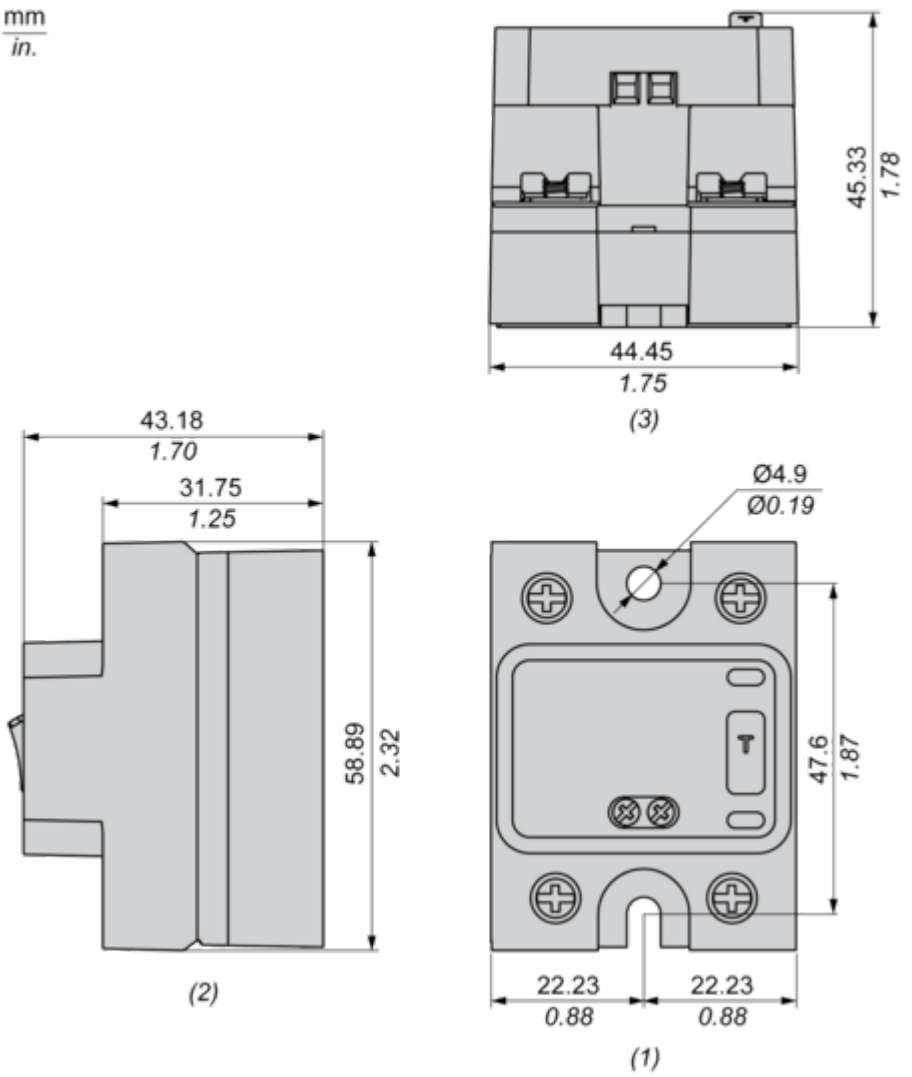

(1) Front view
(2) Side view
(3) Bottom view

Connections and Schema

Wiring Diagram

Single Supply Connection

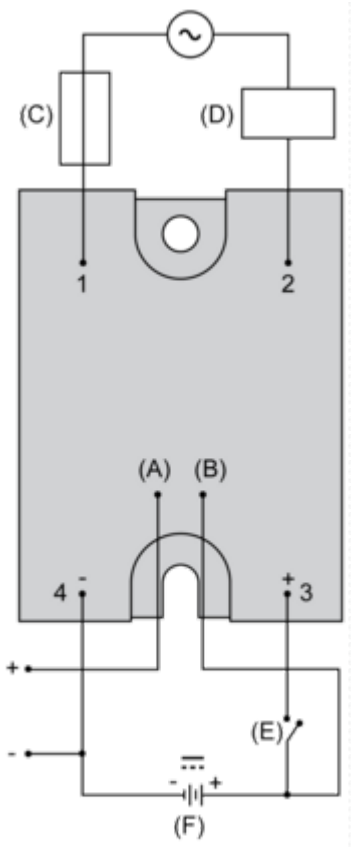

(F) Control/Auxiliary supply (4…32 V DC)
(A) Alarm output terminal (4...32 V DC)
(B) Auxiliary supply terminal
(C) Fuse or circuit-breaker
(D) Load
(E) Switch to energize load

Dual Supply Connection

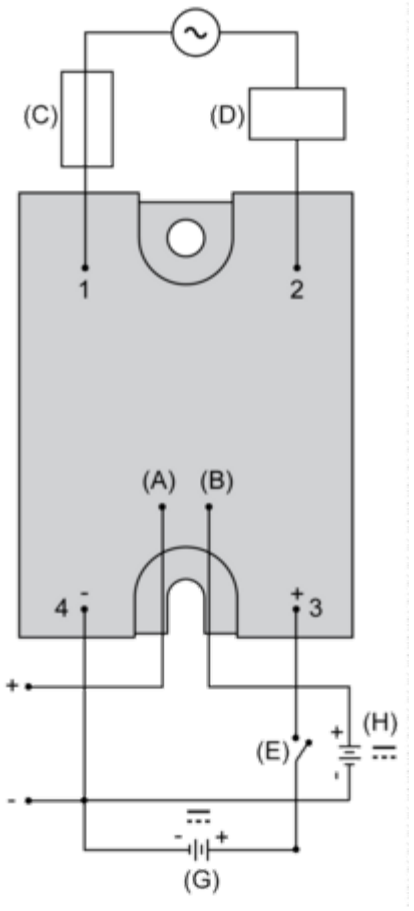

(G) Control supply (4...32 V DC)
(H) Auxiliary supply (4...32 V DC)
(A) Alarm output terminal (4...32 V DC)
(B) Auxiliary supply terminal
(C) Fuse or circuit-breaker
(D) Load
(E) Switch to energize load

Performance Curves

Derating Curves

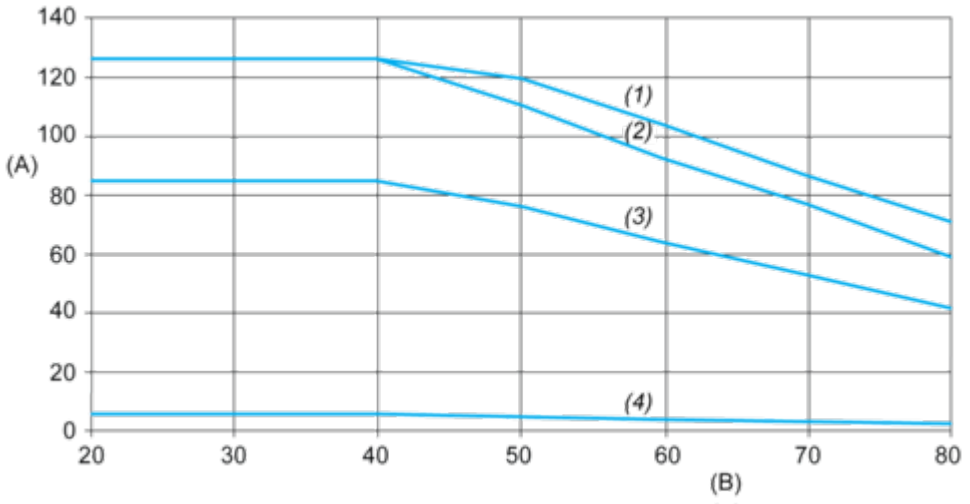

A : Load Current (Arms)
B : Ambient Temperature (°C)
(1) For Heatsink SSRHP02
(2) For Heatsink SSRHP05
(3) For Heatsink SSRHP07
(4) No Heatsink