Product data sheet

Specifications

Green Premium™

Discontinued

Harmony, Solid state modular relay, 45 A, DIN rail mount, ze voltage swithing, input 3â€¦32 V DC, output 24â€¦280 V AC

SSM1A145BD

Discontinued on: Mar 30, 2023

Product availability: Non-Stock - Not normally stocked in distribution facility

Main

Range Of Product	Harmony Solid State Relays
Product Or Component Type	Solid state relay up to 50 A
Device Short Name	SSM1
Number Of Phases	1 phase
Output Switching Mode	Zero voltage switching

Complementary

Mounting Support	Symmetrical DIN rail
Line Rated Current	45 A
Output Voltage	24...280 V AC
[Uc] Control Circuit Voltage	3...32 V DC
Tightening Torque	0.6...0.7 N.m for input 1.36...1.7 N.m for output
Connections - Terminals	Screw terminals 1 x 0.2...1 x 3.3 mm², AWG 24...AWG 12) input Screw terminals 1 x 0.2...1 x 8.4 mm², AWG 24...AWG 8) output
Maximum Capacitance	8 pF for input/output
Insulation Resistance	1000 MOhm at 500 V DC
Local Signalling	for input status LED (green)
Switching Voltage	1 V DC turn-off 3 V DC turn-on
Input Current	14…17 mA
Solid State Output Type	SCR output Zero voltage switching
Load Current	0.15…45 A
Transient Overvoltage	600 V
Surge Current	625 A 16.6 ms
Maximum Voltage Drop	<1.6 V on-state
Maximum I²T For Fusing	1620 A².s for 8.3 ms
Maximum Leakage Current	10 mA off-state
Dv/Dt	500 V/µs off-state at maximum voltage

Price is “List Price” and may be subject to a trade discount – check with your local distributor or retailer for actual price.

Disclaimer: This documentation is not intended as a substitute for and is not to be used for determining suitability or reliability of these products for specific user applications

Response Time	0.5 cycle (turn-on) 0.5 cycle (turn-off)
Overvoltage Category	III
Net Weight	1.05 lb(US) (0.476 kg)

Environment

Dielectric Strength	4 kV AC for input/output 4 kV AC for input or output to case
Pollution Degree	2
Standards	IEC 60950-1 CSA C22.2 No 14 UL 508
Product Certifications	CSA UL EAC
Marking	CSA EAC UL CE
Ip Degree Of Protection	IP20
Ambient Air Temperature For Operation	-40…176 °F (-40…80 °C)
Ambient Air Temperature For Storage	-40…257 °F (-40…125 °C)

Ordering and shipping details

Category	US10CP222375
Discount Schedule	0CP2
Gtin	3606485441634
Returnability	No
Country Of Origin	MX

Packing Units

Unit Type Of Package 1	PCE
Number Of Units In Package 1	1
Package 1 Height	2.36 in (6.0 cm)
Package 1 Width	4.53 in (11.5 cm)
Package 1 Length	4.65 in (11.8 cm)
Package 1 Weight	18.45 oz (523.0 g)
Unit Type Of Package 2	S02
Number Of Units In Package 2	12
Package 2 Height	5.91 in (15.0 cm)
Package 2 Width	11.81 in (30.0 cm)
Package 2 Length	15.75 in (40.0 cm)
Package 2 Weight	14.73 lb(US) (6.68 kg)

Sustainability

Green Premium™ label is Schneider Electric's commitment to delivering products with best-in-class environmental performance. Green Premium promises compliance with the latest regulations, transparency on environmental impacts, as well as circular and low-CO_2 products.

Guide to assessing product sustainability is a white paper that clarifies global eco-label standards and how to interpret environmental declarations.

Learn more about Green Premium >

Guide to assess a product's sustainability >

Transparency RoHS/REACh

Well-being performance

Mercury Free

Rohs Exemption Information Yes

Certifications & Standards

Reach Regulation	REACh Declaration
Eu Rohs Directive	Pro-active compliance (Product out of EU RoHS legal scope)
China Rohs Regulation	China RoHS declaration
Environmental Disclosure	Product Environmental Profile
Circularity Profile	End of Life Information
California Proposition 65	WARNING: This product can expose you to chemicals including: Lead and lead compounds, which is known to the State of California to cause cancer and birth defects or other reproductive harm. For more information go to www.P65Warnings.ca.gov

Dimensions Drawings

Dimensions

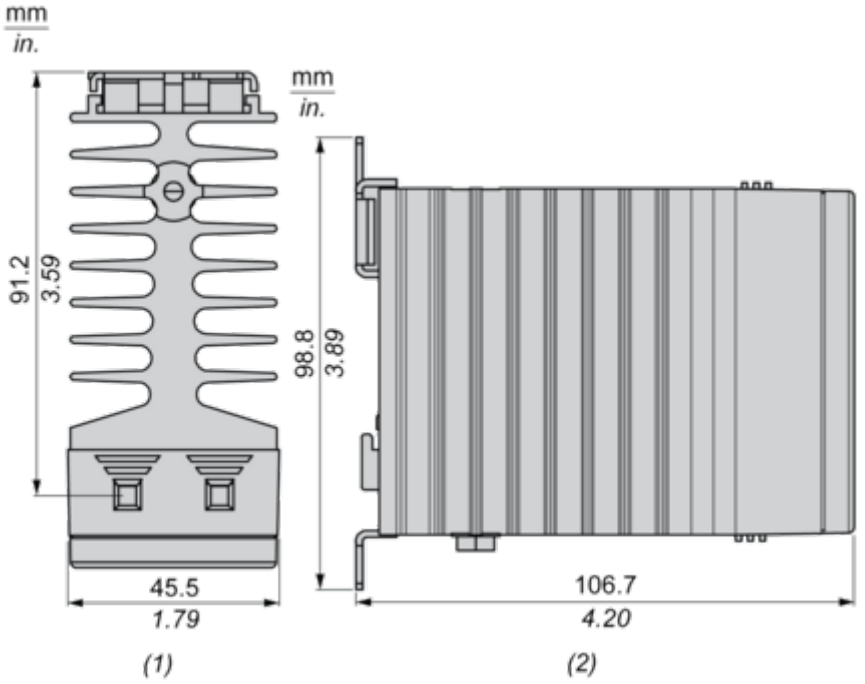

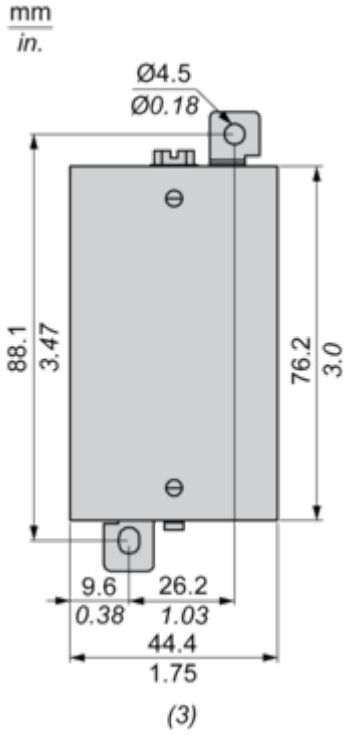

(1) Top view
(2) Side view
(3) Front view

Performance Curves

Derating Curves

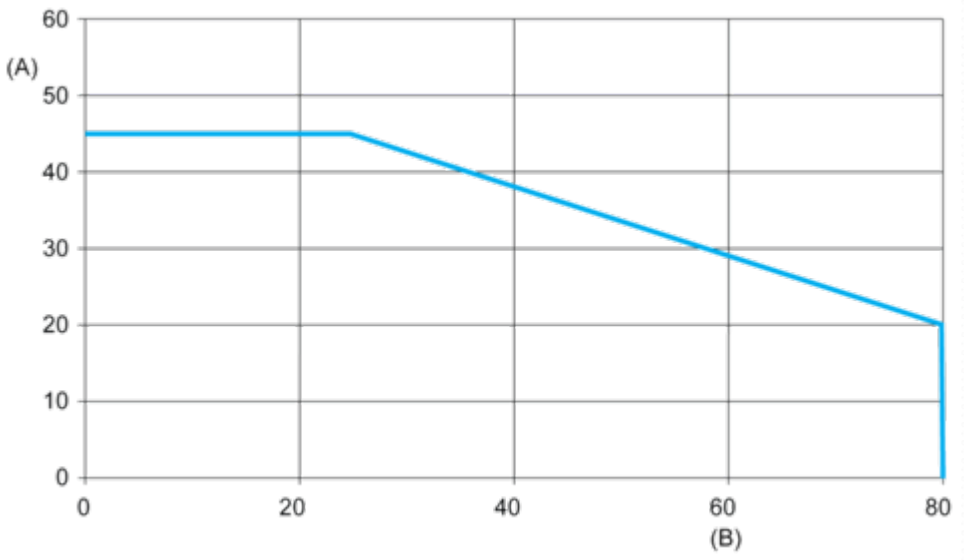

A : Load Current (Amperes)
B : Ambient Temperature (°C)