Product data sheet

Specifications

Green Premium™

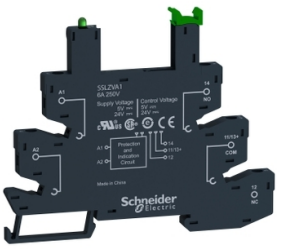

Harmony, Socket, 6 A, relay type SSL, screw connector, 110 V AC/DC

SSLZVA3

Discontinued

Discontinued on: Jul 14, 2021

End-of-service on: Dec 31, 2021

Product availability: Non-Stock - Not normally stocked in distribution facility

Main

Range Of Product	Harmony Relay
Device Short Name	SSLZ
Product Or Component Type	Socket
Product Compatibility	Solid state relay SSL NO 110 V AC Solid state relay SSL NO 110 V DC
[Ith] Conventional Free Air Thermal Current	6 A
Switching Voltage	110 V AC/DC
[Ue] Rated Operational Voltage	< 250 V AC/DC

Complementary

Shape Of Pin	Flat
Contact Terminal Arrangement	Separate
Connections - Terminals	Screw clamp terminals, 1 x 0.2...1 x 2.5 mm² AWG 24...AWG 14) solid without cable end Screw clamp terminals, 1 x 0.2...1 x 2.5 mm² AWG 24...AWG 14) flexible with cable end
Tightening Torque	< 0.4 N.m M2.5
Fixing Mode	Clip-on (35 mm DIN rail)
Sale Per Indivisible Quantity	10
Local Signalling	for input status LED (green)
Width	0.24 in (6.2 mm)
Height	3.98 in (101 mm)
Depth	3.09 in (78.6 mm)
Net Weight	0.06 lb(US) (0.0285 kg)

Environment

Standards	IEC 61984
Product Certifications	CSA C22-2 No 14 UL 508
Marking	CE
Ambient Air Temperature For Storage	-40…185 °F (-40…85 °C)

Price is “List Price” and may be subject to a trade discount – check with your local distributor or retailer for actual price.

Disclaimer: This documentation is not intended as a substitute for and is not to be used for determining suitability or reliability of these products for specific user applications

Ambient Air Temperature For Operation	-40…158 °F (-40…70 °C)
Ip Degree Of Protection	IP20
Flame Retardance	V0 conforming to UL 94

Ordering and shipping details

Category	US10CP221127
Discount Schedule	0CP2
Gtin	3606480580147
Returnability	No
Country Of Origin	CN

Packing Units

Unit Type Of Package 1	PCE
Number Of Units In Package 1	1

Sustainability

Green Premium™ label is Schneider Electric's commitment to delivering products with best-in-class environmental performance. Green Premium promises compliance with the latest regulations, transparency on environmental impacts, as well as circular and low-CO_2 products.

Guide to assessing product sustainability is a white paper that clarifies global eco-label standards and how to interpret environmental declarations.

Learn more about Green Premium >

Guide to assess a product's sustainability >

Transparency RoHS/REACh

Well-being performance

Reach Free Of Svhc	
Toxic Heavy Metal Free	
Mercury Free	
Rohs Exemption Information	Yes

Certifications & Standards

Reach Regulation	REACh Declaration
Eu Rohs Directive	Pro-active compliance (Product out of EU RoHS legal scope) EU RoHS Declaration
China Rohs Regulation	China RoHS declaration
Environmental Disclosure	Product Environmental Profile
Circularity Profile	End of Life Information
California Proposition 65	WARNING: This product can expose you to chemicals including: Nickel compounds, which is known to the State of California to cause cancer, and Di-isodecyl phthalate (DIDP), which is known to the State of California to cause birth defects or other reproductive harm. For more information go to www.P65Warnings.ca.gov

Dimensions Drawings

Dimensions

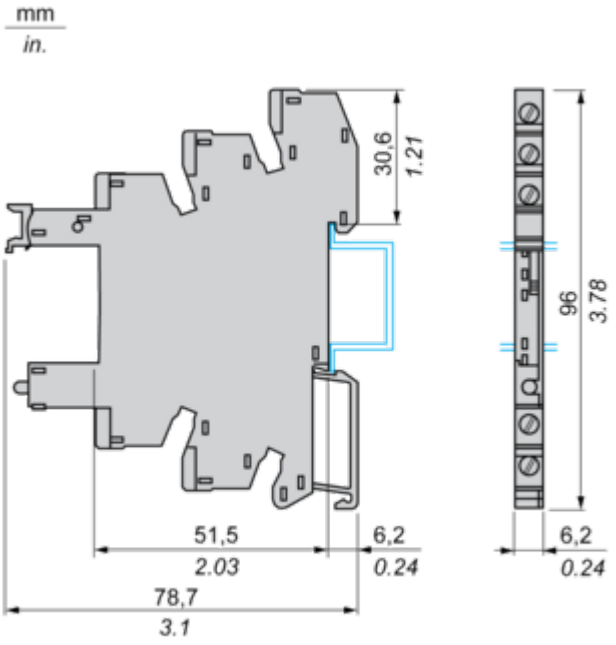

Connections and Schema

Wiring Diagram

Wiring Diagram for DC Output

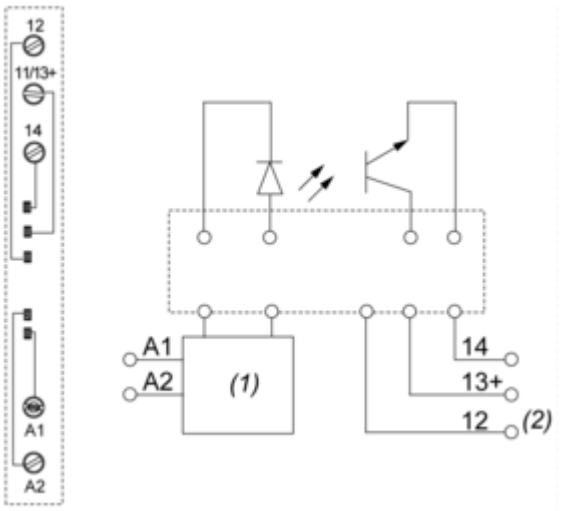

(1) Protection circuit
(2) Terminal 12 is not in use for SSL Relay

Wiring Diagram for AC Output

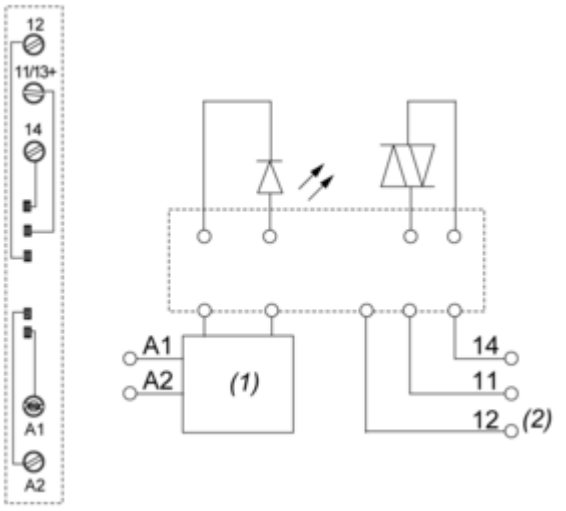

(1) Protection circuit
(2) Terminal 12 is not in use for SSL Relay

Example of RSLZ2 Bus Jumper Mounting on Sockets

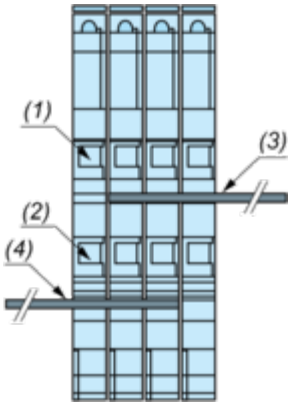

(1) A1
(2) A2
(3) Bus jumper polarity A1
(4) Bus jumper polarity A2