Product data sheet

Specifications

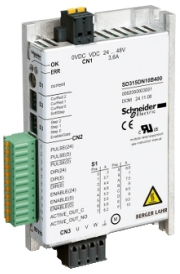

motion control stepper motor drive - SD315 - pulse direction with oscillator

SD315ON10B400

Product availability: Non-Stock - Not normally stocked in distribution facility

Price*: 488.38 USD

Main

Range Of Product	Lexium SD3
Product Or Component Type	Motion stepper drive
Device Short Name	SD315
Supply Voltage Limits	19…60 V

Complementary

Format Of The Drive	Block
Phase	Single phase
[Us] Rated Supply Voltage	24...48 V - 15...10 %
Supply Voltage Type	DC
Communication Interface	Pulse/direction, Integrated
Maximum Motor Phase Current	10 A
Current Consumption	<= 7.5 mA
Power Losses	<= 7 W
Associated Fuse Rating	10 A
Overvoltage Category	III
Maximum Leakage Current	30 mA
Voltage State 0 Guaranteed	<= 5 V 24 V optocoupler input signals <= 0.4 V 5 V optocoupler input signals
Voltage State 1 Guaranteed	15...30 V 24 V optocoupler input signals 2.5...5.25 V 5 V optocoupler input signals
Input Current	25 mA 5 V optocoupler input signals 7 mA 24 V optocoupler input signals
Maximum Input Frequency	200 kHz 24 V optocoupler input signals 200 kHz 5 V optocoupler input signals
Maximum Switching Voltage	30 V DC readiness signal output) 30 V pulse/direction output signal) 10 V DC output signal)
Maximum Switching Current	200 mA readiness signal output) 50 mA pulse/direction output signal) 20 mA output signal)
Maximum Voltage Drop	<1 V 50 mA load readiness signal output <0.5 V pulse/direction output signal
Physical Interface	RS422 - pulse/direction interface with oscillator

Price is “List Price” and may be subject to a trade discount – check with your local distributor or retailer for actual price.

Disclaimer: This documentation is not intended as a substitute for and is not to be used for determining suitability or reliability of these products for specific user applications

Input Voltage	< 30 V
Residual Ripple	< 5 % 24 V control voltage)
Resistance	10 kOhm external potentiometer)
Analogue Input Type	Voltage 0...10 V 10 bits 50 kOhm
Local Signalling	1 LED - ERR 1 LED - RUN
Type Of Cooling	Natural convection
Height	4.61 in (117 mm)
Width	2.93 in (74.5 mm)
Depth	0.93 in (23.5 mm)
Shock Resistance	15 gn 11 ms IEC 60068-2-27
Net Weight	0.55 lb(US) (0.25 kg)

Environment

Electromagnetic Compatibility	Electrostatic discharge level 3 IEC 61000-4-2 Immunity to electrical transients level 4 IEC 61000-4-4 Immunity to radiated radio-electrical interference level 3 IEC 61000-4-3 Voltage/current impulse level 3 IEC 61000-4-5
Standards	IEC 61800-3 environment 1 IEC 61800-3 IEC 50178 IEC 61800-5-1 EN/IEC 61800-3 environment 2
Product Certifications	UL cUL
Marking	CE
Ambient Air Temperature For Operation	32…122 °F (0…50 °C)
Ambient Air Temperature For Storage	-13…158 °F (-25…70 °C)
Pollution Degree	Level 2
Relative Humidity	5…85 % without condensation
Operating Altitude	<= 3280.84 ft (1000 m) without derating > 3280.84...< 6561.68 ft (> 1000...< 2000 m) without derating maximum ambient temperature 40°C, lateral distance of > 20 mm)
Vibration Resistance	1 gn 13…150 Hz)IEC 60068-2-6 1.5 mm 3…13 Hz)IEC 60068-2-6
Ip Degree Of Protection	IP20

Ordering and shipping details

Category	US1PC5518285
Discount Schedule	PC55
Gtin	3606485186146
Returnability	No
Country Of Origin	DE

Packing Units

Unit Type Of Package 1	PCE
Number Of Units In Package 1	1

Package 1 Height	2.68 in (6.8 cm)
Package 1 Width	5.04 in (12.8 cm)
Package 1 Length	7.48 in (19.0 cm)
Package 1 Weight	12.95 oz (367.0 g)
Unit Type Of Package 2	S03
Number Of Units In Package 2	12
Package 2 Height	11.81 in (30.0 cm)
Package 2 Width	11.81 in (30.0 cm)
Package 2 Length	15.75 in (40.0 cm)
Package 2 Weight	10.80 lb(US) (4.897 kg)

Contractual warranty

Warranty	18 months

Sustainability

Green Premium™ label is Schneider Electric's commitment to delivering products with best-in-class environmental performance. Green Premium promises compliance with the latest regulations, transparency on environmental impacts, as well as circular and low-CO_2 products.

Guide to assessing product sustainability is a white paper that clarifies global eco-label standards and how to interpret environmental declarations.

Learn more about Green Premium >

Guide to assess a product's sustainability >

Transparency RoHS/REACh

Well-being performance

Mercury Free	
Rohs Exemption Information	Yes
Pvc Free	

Certifications & Standards

Reach Regulation	REACh Declaration
Eu Rohs Directive	Pro-active compliance (Product out of EU RoHS legal scope)
China Rohs Regulation	China RoHS declaration
Environmental Disclosure	Product Environmental Profile
Circularity Profile	End of Life Information
California Proposition 65	WARNING: This product can expose you to chemicals including: Lead and lead compounds, which is known to the State of California to cause cancer and birth defects or other reproductive harm. For more information go to www.P65Warnings.ca.gov

Dimensions Drawings

Dimensions

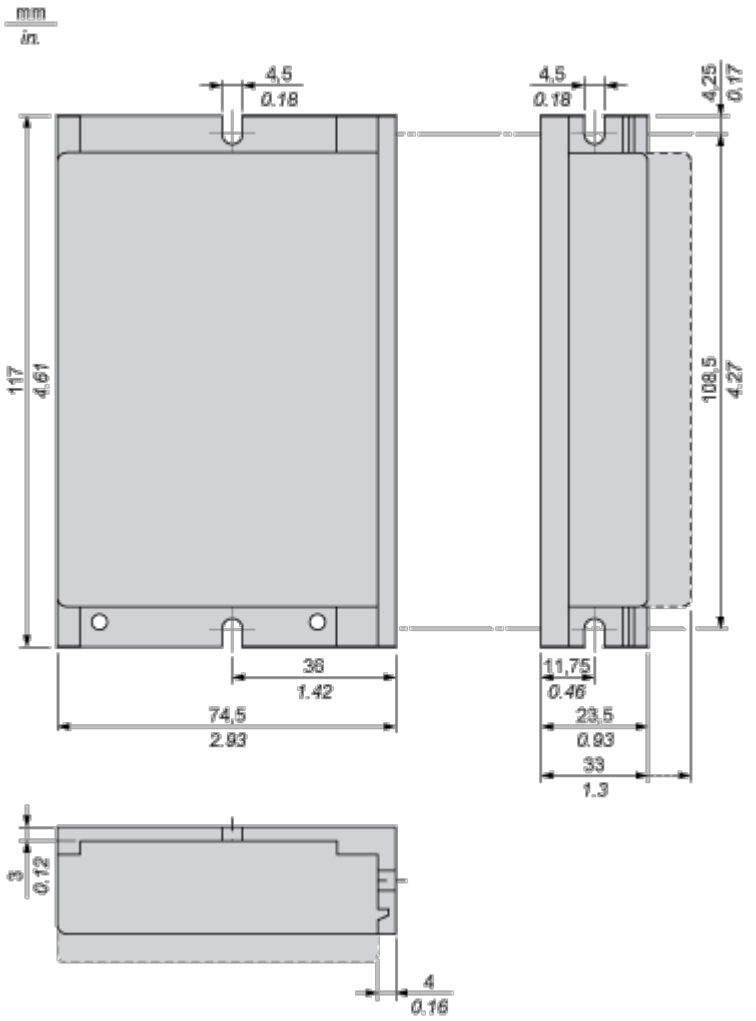

Mounting and Clearance

Mounting and Clearance

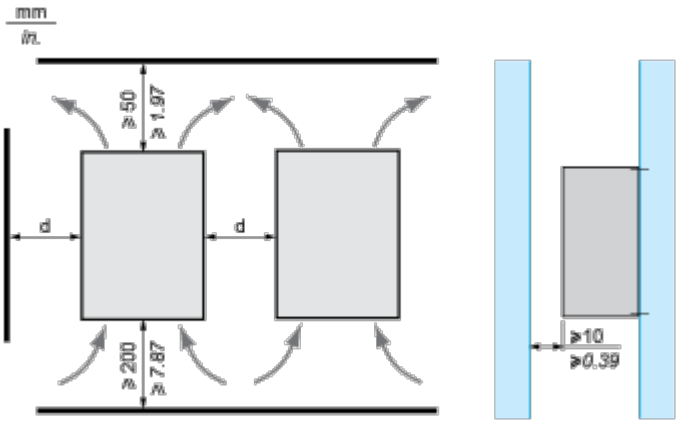

d : >30 mm/1.18 in.

Connections and Schema

Wiring Example with 5 V

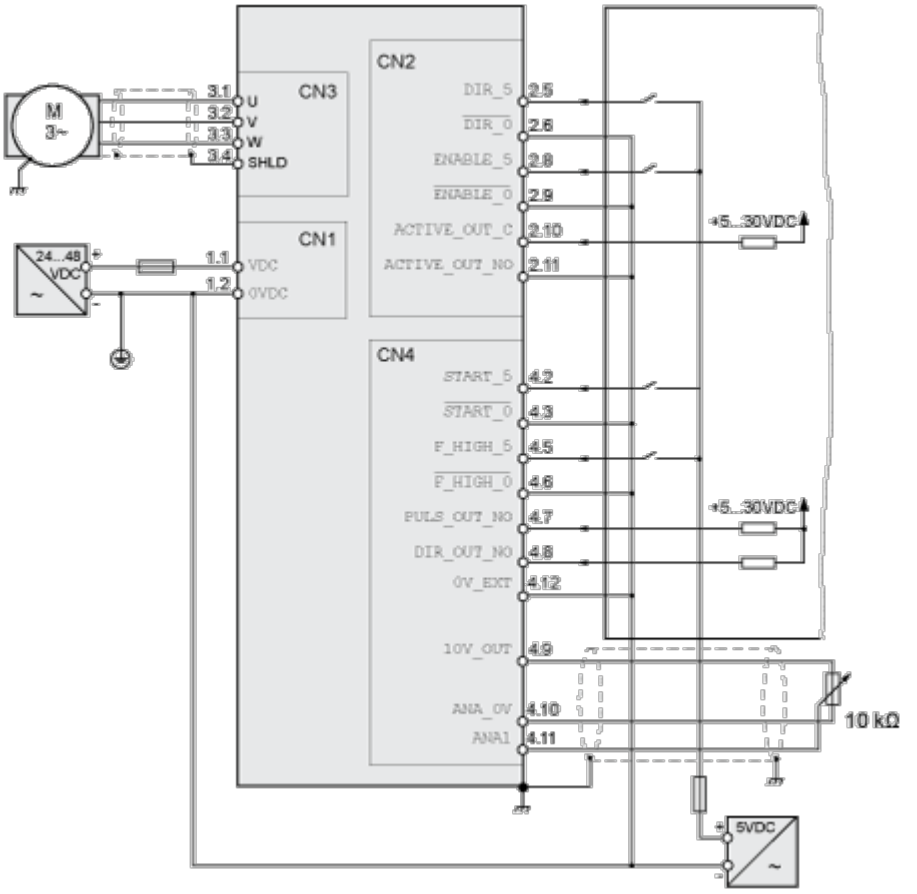
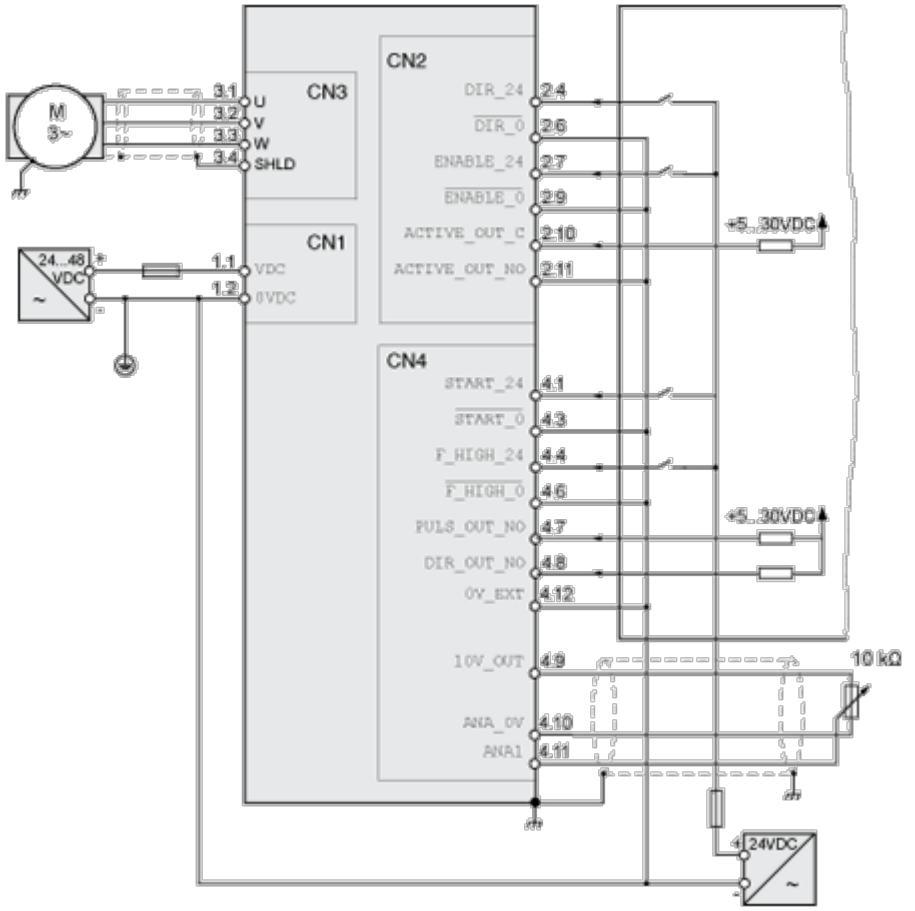
Wiring Example with 24 V