Product data sheet

Specifications

Green Premium™

power relay plug-in - Harmony RPF - 2 NO - 110 V DC - 25 A

RPF2AFD

Discontinued on: Jan 29, 2021

Discontinued

Main

Range Of Product	Harmony Relay
Series Name	Power
Product Or Component Type	Plug-in relay
Device Short Name	RPF
Contacts Type And Composition	2 NO
[Uc] Control Circuit Voltage	110 V DC
Shape Of Pin	Flat
Contacts Material	Silver tin oxide
Resistive Rated Load	25 A 28 V DC 30 A 250 V AC
Utilisation Coefficient	10 %

Complementary

Mounting Support	DIN rail Panel
Control Circuit Voltage Limits	88...121 V
[Ie] Rated Operational Current	30 A 277 V AC) NO UL 20 A 28 V DC) NO UL 30 A 250 V AC) NO IEC 25 A 28 V DC) NO IEC
[Ui] Rated Insulation Voltage	250 V EN/IEC 60947
[Uimp] Rated Impulse Withstand Voltage	4 kV IEC 61000-4-5
Maximum Switching Voltage	250 V IEC
Maximum Switching Capacity	7500 VA/700 W
Minimum Recommended Switching Capacity	170 mW
Operating Rate	<= 1200 cycles/hour under load <= 18000 cycles/hour no-load
Mechanical Durability	5000000 cycles
Electrical Durability	100000 cycles resistive
Average Coil Consumption	1.7 W
Drop-Out Voltage Threshold	>= 0.1 Uc DC
Operate Time	20 ms
Release Time	20 ms

Price is “List Price” and may be subject to a trade discount – check with your local distributor or retailer for actual price.

Disclaimer: This documentation is not intended as a substitute for and is not to be used for determining suitability or reliability of these products for specific user applications

Average Resistance	7255 Ohm at 68 °F (20 °C) +/- 10 %
Safety Reliability Data	B10d = 100000
Protection Category	RT IV
Operating Position	Any position
Net Weight	0.18 lb(US) (0.082 kg)
Device Presentation	Complete product

Environment

Dielectric Strength	2000 V AC between poles with basic 4000 V AC between coil and contact with reinforced 1500 V AC between contacts with micro disconnection
Standards	UL 508 EN/IEC 61810-1 CSA C22.2 No 14
Product Certifications	CSA GOST UL CE
Ambient Air Temperature For Storage	-40…185 °F (-40…85 °C)
Ambient Air Temperature For Operation	-40…131 °F (-40…55 °C)
Vibration Resistance	10 gn +/- 1 mm 10…150 Hz)5 cycles in operation EN/IEC 60068-2-27 3 gn +/- 1 mm 10…150 Hz)5 cycles not operating EN/IEC 60068-2-27
Ip Degree Of Protection	IP40 conforming to EN/IEC 60529
Shock Resistance	10 gnin operation EN/IEC 60068-2-27 10 gnnot operating EN/IEC 60068-2-27
Pollution Degree	3

Ordering and shipping details

Category	21127-ZELIO ICE CUBE RELAYS
Discount Schedule	CP2
Gtin	00785901817321
Returnability	No
Country Of Origin	CN

Contractual warranty

Warranty	18 months

Sustainability

Green Premium™ label is Schneider Electric's commitment to delivering products with best-in-class environmental performance. Green Premium promises compliance with the latest regulations, transparency on environmental impacts, as well as circular and low-CO_2 products.

Guide to assessing product sustainability is a white paper that clarifies global eco-label standards and how to interpret environmental declarations.

Learn more about Green Premium >

Guide to assess a product's sustainability >

Transparency RoHS/REACh

Well-being performance

Reach Free Of Svhc

Rohs Exemption Information	Yes

Certifications & Standards

Reach Regulation	REACh Declaration
Eu Rohs Directive	Pro-active compliance (Product out of EU RoHS legal scope) EU RoHS Declaration
China Rohs Regulation	China RoHS declaration
Environmental Disclosure	Product Environmental Profile
Weee	The product must be disposed on European Union markets following specific waste collection and never end up in rubbish bins.
Circularity Profile	No need of specific recycling operations
California Proposition 65	WARNING: This product can expose you to chemicals including: Nickel compounds, which is known to the State of California to cause cancer, and Di-isodecyl phthalate (DIDP), which is known to the State of California to cause birth defects or other reproductive harm. For more information go to www.P65Warnings.ca.gov

Dimensions Drawings

Dimensions

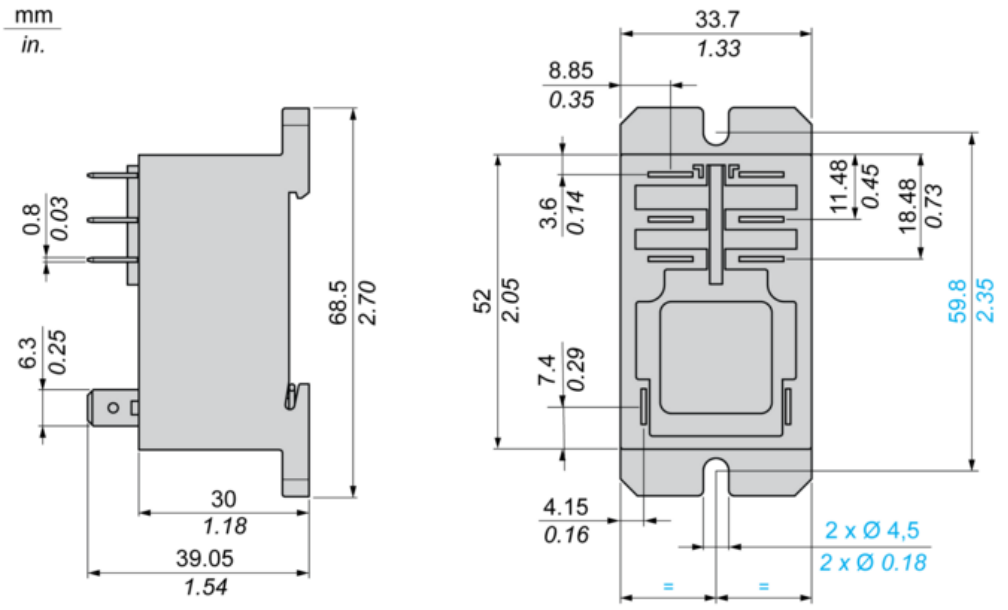

Connections and Schema

Wiring Diagram

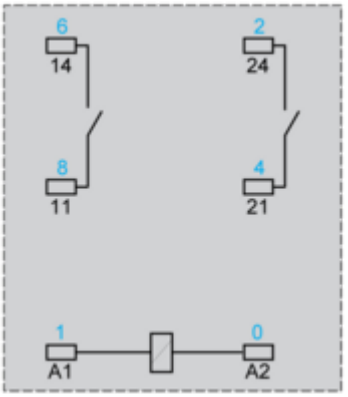

Symbols shown in blue correspond to Nema marking.

Performance Curves

Electrical Durability of Contacts

AC Resistive load

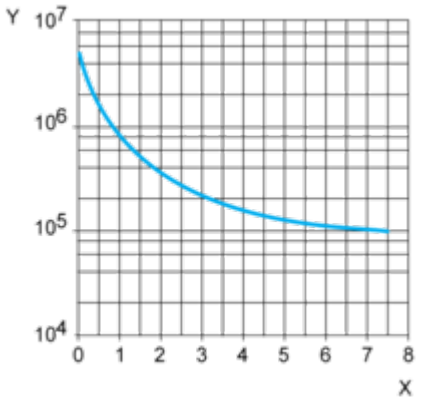

X Switching capacity (kVA)
Y Durability (number of operating cycles)

AC Reduction coefficient for inductive load (depending on power factor cos ϕ)

Durability (inductive load) = durability (resistive load) x reduction coefficient.

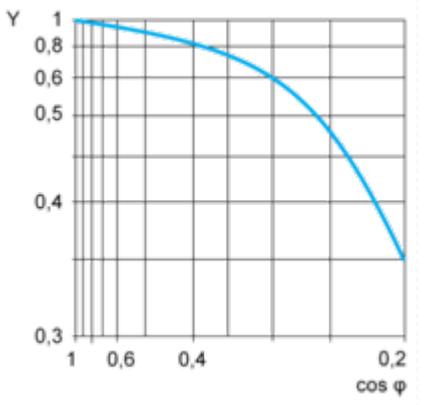

Y reduction coefficient

Maximum switching capacity on DC resistive load

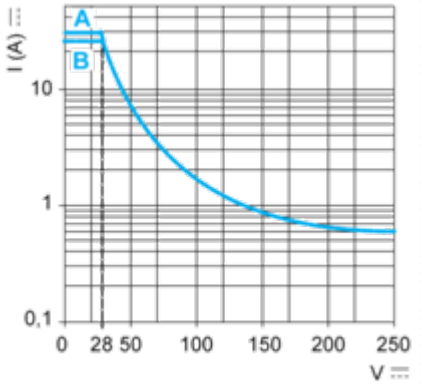

A 30 A
B 25 A
Note : These are typical curves, actual durability depends on load, environment, duty cycle, etc.