Product data sheet

Specifications

Green Premium™

single function relay, Harmony Timer Relays, 5A, 2CO, 0.1s.. 100h, on delay, 120V AC

REXL2TMF7

Product availability: Stock - Normally stocked in distribution facility

Price*: 53.00 USD

Main

Range Of Product	Harmony Timer Relays
Product Or Component Type	Single function relay
Fixing Mode	Plug-in (socket)
Discrete Output Type	Relay
Contacts Type And Composition	2 C/O
Component Name	REXL
Time Delay Type	Power on-delay
Time Delay Range	10...100 h 6...60 s 6...60 min 1...10 min 0.1...1 s 1...10 s 1...10 h
Width	0.83 in (21 mm)

Complementary

Contacts Material	Cadmium free
[Us] Rated Supply Voltage	120 V AC 50/60 Hz
Voltage Range	0.85...1.15 Us
Line Rated Current	5 A AC
Repeat Accuracy	+/- 0.5 %
Setting Accuracy Of Time Delay	10 % at full scale 25 °C IEC 61812-1
Temperature Drift	0.05 %/°C
Maximum Reset Time	250 ms after time delay, on de-energisation 50 ms during time delay, on de-energisation
Voltage Drift	+/- 0.2 %/V
Maximum Switching Capacity	4 x 5 A
Maximum Temporary Permissible Current	10 A < 10 s
Minimum Switching Current	100 mA
Electrical Durability	100000 cycles 250 V AC resistive
Mechanical Durability	10000000 cycles
Maximum Power Consumption	2.6 VA

Price is “List Price” and may be subject to a trade discount – check with your local distributor or retailer for actual price.

Disclaimer: This documentation is not intended as a substitute for and is not to be used for determining suitability or reliability of these products for specific user applications

[Ui] Rated Insulation Voltage	250 V IEC 255 Group C 250 V VDE 0010
Output Overvoltage Protection	2 J
Surge Withstand	2 kV IEC 61000-4-5 level 3
Creepage Distance	4 kV/3 IEC 60664-1
Local Signalling	for output in operation 1 LED (red) for power ON 1 LED (yellow)
Number Of Functions	1
Net Weight	0.11 lb(US) (0.05 kg)

Environment

Immunity To Microbreaks	5 ms
Dielectric Strength	2 kV 1 mA/1 minute 50 Hz IEC 60601-1 2 kV 1 mA/1 minute 50 Hz IEC 61812-1
Standards	IEC 61000-6-2 93/68/EEC EN 50081-2 IEC 61812-1 73/23/EEC IEC 60601-2 89/336/EEC IEC 60601-1
Product Certifications	cUL UL
Ambient Air Temperature For Operation	-4…140 °F (-20…60 °C)
Ambient Air Temperature For Storage	-40…158 °F (-40…70 °C)
Ip Degree Of Protection	IP50 conforming to IEC 60529
Vibration Resistance	0.35 mm 10…55 Hz)IEC 60068-2-6
Relative Humidity	95 % without condensation IEC 60068-2-6
Resistance To Electrostatic Discharge	6 kV in contact IEC 61000-4-2 level 3 8 kV in air IEC 61000-4-2 level 3
Resistance To Electromagnetic Fields	9.14 V/m (10 V/m) IEC 61000-4-3 level 3
Resistance To Fast Transients	2 kV IEC 61000-4-4 level 3
Immunity To Radioelectric Fields	10 V 0.15...80 MHz)IEC 61000-4-6 level 3
Immunity To Voltage Dips	>= 95 % / 1 s IEC 61000-4-11 30 % / 10 ms IEC 61000-4-11 60 % / 100 ms IEC 61000-4-11
Disturbance Radiated/Conducted	Class B EN 55022 (EN 55011 group 1)

Ordering and shipping details

Category	US10CP222370
Discount Schedule	0CP2
Gtin	3389119400046
Returnability	Yes
Country Of Origin	ID

Packing Units

Unit Type Of Package 1	PCE

Number Of Units In Package 1	1
Package 1 Height	1.22 in (3.1 cm)
Package 1 Width	2.95 in (7.5 cm)
Package 1 Length	1.22 in (3.1 cm)
Package 1 Weight	1.76 oz (50.0 g)

Contractual warranty

Warranty	18 months

Sustainability

Green Premium™ label is Schneider Electric's commitment to delivering products with best-in-class environmental performance. Green Premium promises compliance with the latest regulations, transparency on environmental impacts, as well as circular and low-CO_2 products.

Guide to assessing product sustainability is a white paper that clarifies global eco-label standards and how to interpret environmental declarations.

Learn more about Green Premium >

Guide to assess a product's sustainability >

Transparency RoHS/REACh

Well-being performance

Mercury Free

Rohs Exemption Information	Yes

Certifications & Standards

Reach Regulation	REACh Declaration
Eu Rohs Directive	Pro-active compliance (Product out of EU RoHS legal scope)
China Rohs Regulation	China RoHS declaration
Environmental Disclosure	Product Environmental Profile
Weee	The product must be disposed on European Union markets following specific waste collection and never end up in rubbish bins.
Circularity Profile	No need of specific recycling operations
California Proposition 65	WARNING: This product can expose you to chemicals including: Nickel compounds, which is known to the State of California to cause cancer, and Di-isodecyl phthalate (DIDP), which is known to the State of California to cause birth defects or other reproductive harm. For more information go to www.P65Warnings.ca.gov

Dimensions Drawings

Width 21 mm

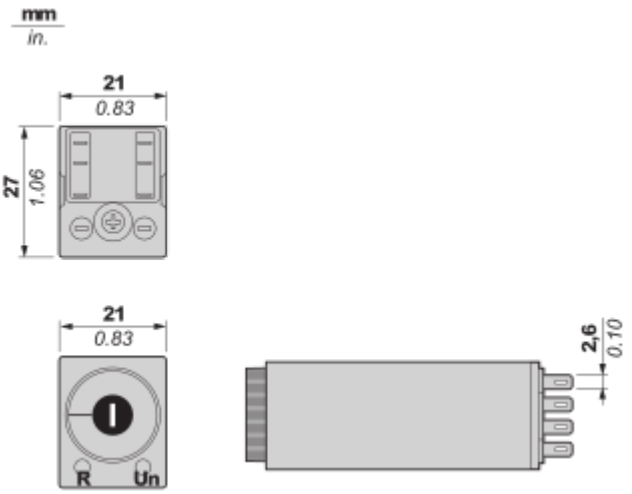

Connections and Schema

Terminal Referencing

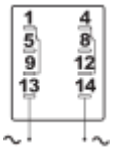

Technical Description

Function A : Power on Delay Relay

Description

The timing period T begins on energisation. After timing, the outputs close.
2 Timed C/O Contacts

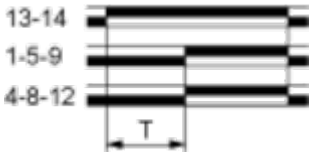

Legend

Relay de-energised

Relay energised

Output open

Output closed

R	Relay output
T	Timing period