Product data sheet

Specifications

Mini circuit breaker, QO, 150A, 2 pole, 120/240VAC, 10kA, plug in

QO2150

Product availability: Stock - Normally stocked in distribution facility

Price*: 491.00 USD

Main

Product	Miniature circuit-breaker
Range	QO
Current Rating	150 A
Voltage Rating	120/240 V AC 120 V AC
Mounting Type	Plug-in
Number Of Poles	2P
Circuit Breaker Type	Standard
Ratings	HACR rated
Electrical Connection	Box lugs

Complementary

Interrupt Rating	10 kA 120/240 V AC 10 kA 120 V AC
Number Of Panel Spaces	4
Wire Size	AWG 1...300 kcmil copper or aluminium
Tightening Torque	250.48 lbf.in (28.3 N.m)
Height	3.50 in (89 mm)
Width	1.50 in (38 mm)
Depth	2.91 in (74 mm)
Net Weight	2.63 lb(US) (1.193 kg)

Environment

Certifications	UL Listed CSA
Ambient Rating	104 °F (40 °C)

Ordering and shipping details

Category	US1DE2A00082
Discount Schedule	DE2A
Gtin	785901300021
Returnability	Yes
Country Of Origin	US

Price is “List Price” and may be subject to a trade discount – check with your local distributor or retailer for actual price.

Disclaimer: This documentation is not intended as a substitute for and is not to be used for determining suitability or reliability of these products for specific user applications

Packing Units

Unit Type Of Package 1	PCE
Number Of Units In Package 1	1
Package 1 Height	4.80 in (12.192 cm)
Package 1 Width	6.90 in (17.526 cm)
Package 1 Length	7.90 in (20.066 cm)
Package 1 Weight	2.63 lb(US) (1.193 kg)

Contractual warranty

Warranty	18 months

Sustainability

Green Premium™ label is Schneider Electric's commitment to delivering products with best-in-class environmental performance. Green Premium promises compliance with the latest regulations, transparency on environmental impacts, as well as circular and low-CO_2 products.

Guide to assessing product sustainability is a white paper that clarifies global eco-label standards and how to interpret environmental declarations.

Learn more about Green Premium >

Guide to assess a product's sustainability >

RoHS/REACh

Well-being performance

Mercury Free	
Rohs Exemption Information	Yes
Halogen Free Product	

Certifications & Standards

Reach Regulation	REACh Declaration
Eu Rohs Directive	Compliant with Exemptions
China Rohs Regulation	China RoHS declaration Product out of China RoHS scope. Substance declaration for your information.
Circularity Profile	No need of specific recycling operations
California Proposition 65	WARNING: This product can expose you to chemicals including: Cadmium and cadmium compounds, which is known to the State of California to cause cancer and birth defects or other reproductive harm. For more information go to www.P65Warnings.ca.gov

Dimensions Drawings
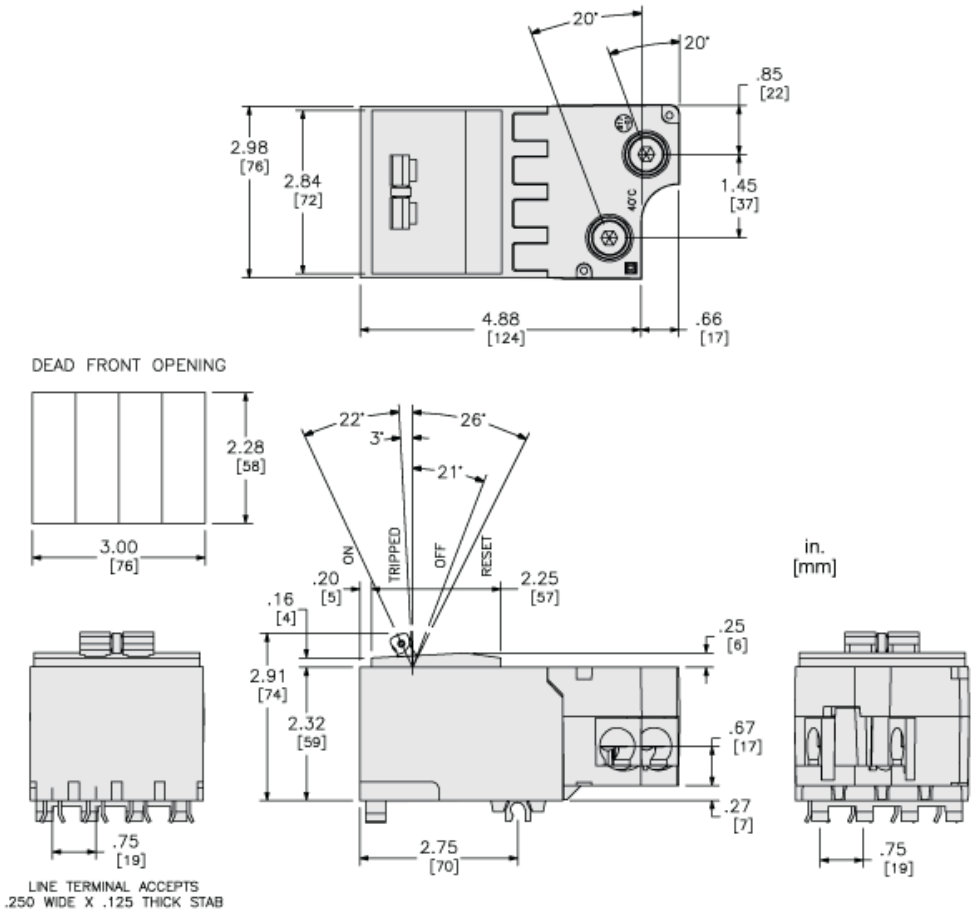
Approximate Dimensions