Product data sheet

Specifications

Green Premium™

portal axis PAS E - profile size 60x60mm - toothed belt - ball - stroke 300mm

PAS42E0300

Discontinued on: Sep 19, 2022

Discontinued

Main

Range Of Product	Lexium PAS E
Product Or Component Type	Portal axis
Product Specific Application	For 1 direction
Load Position	On carriage
Drive Type	Toothed belt
Type Of Guide	Ball

Complementary

Operating Position	Horizontal
Typlical Payload	26.46 lb(US) (12 kg)
Distance Per Revolution	6.10 in (155 mm)
Operating Force	800 N for Fx 2810 N for Fy 2810 N for Fz
Maximum Speed	6.56 ft/s (2 m/s)
Maximum Acceleration	49.21 ft/s² (15 m/s²)
Max. Drive Torque	35.40 lbf.in (4 N.m)
Max. Torque	<44.25 lbf.in (5 N.m) for Mx <97.36 lbf.in (11 N.m) for My <150.46 lbf.in (17 N.m) for Mz
Stroke	11.81 in (300 mm)
Product Weight	16.53 lb(US) (7.5 kg) at 0 stroke with carriage and motor 2.20 lb(US) (1 kg) of carriage 23.59 lb(US) (10.7 kg) total
Repeat Accuracy	+/- 0.05 mm
Profile Dimension	60 x 60 mm
Service Life	30000 km
Associated Module	PLE60 planetary gearbox 5:1 supplied) BMH0702P06A2A servo motor supplied) LXM32.D12N4 servo drive not supplied)

Ordering and shipping details

Gtin	3606485236605

Packing Units

Price is “List Price” and may be subject to a trade discount – check with your local distributor or retailer for actual price.

Disclaimer: This documentation is not intended as a substitute for and is not to be used for determining suitability or reliability of these products for specific user applications

Unit Type Of Package 1	PCE
Number Of Units In Package 1	1
Package 1 Height	6.50 in (16.5 cm)
Package 1 Width	19.21 in (48.8 cm)
Package 1 Length	32.13 in (81.6 cm)
Package 1 Weight	23.66 lb(US) (10.73 kg)

Contractual warranty

Warranty	18 months

Sustainability

Green Premium™ label is Schneider Electric's commitment to delivering products with best-in-class environmental performance. Green Premium promises compliance with the latest regulations, transparency on environmental impacts, as well as circular and low-CO_2 products.

Guide to assessing product sustainability is a white paper that clarifies global eco-label standards and how to interpret environmental declarations.

Learn more about Green Premium >

Guide to assess a product's sustainability >

Transparency RoHS/REACh

Well-being performance

Reach Free Of Svhc	
Mercury Free	
Rohs Exemption Information	Yes
Pvc Free	

Certifications & Standards

Reach Regulation	REACh Declaration
Eu Rohs Directive	Pro-active compliance (Product out of EU RoHS legal scope)
China Rohs Regulation	China RoHS declaration
Environmental Disclosure	Product Environmental Profile
Weee	The product must be disposed on European Union markets following specific waste collection and never end up in rubbish bins.
Circularity Profile	No need of specific recycling operations
California Proposition 65	WARNING: This product can expose you to chemicals including: Lead and lead compounds, which is known to the State of California to cause cancer and birth defects or other reproductive harm. For more information go to www.P65Warnings.ca.gov

Dimensions Drawings

Size Characteristics

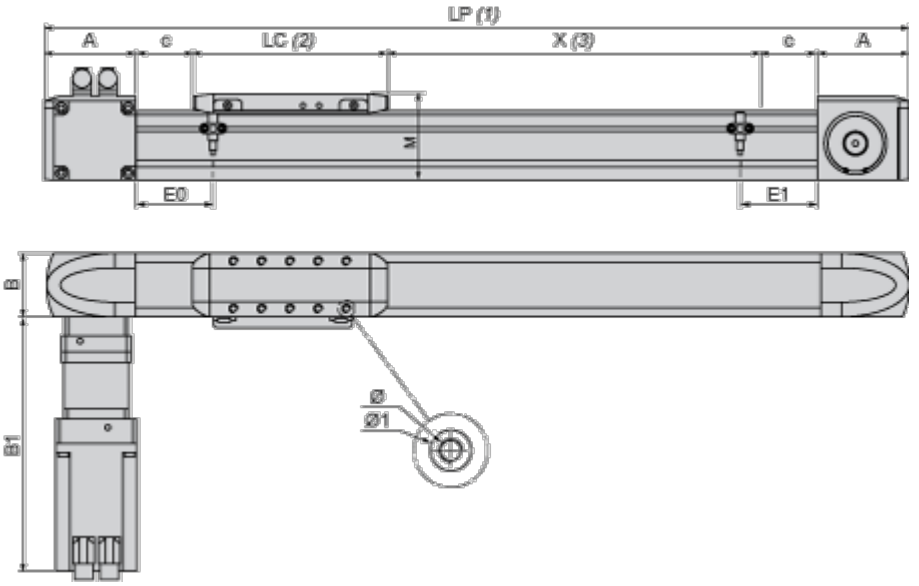

(1) LP : total length of axis

(2) LC : length of carriage

(3) X : Stroke, refer to product characteristics.

A	mm	80
	in.	3.15
B	mm	60
	in.	2.36
B1	mm	278
	in.	10.94
c	mm	15
	in.	0.59
E0	mm	33
	in.	1.30
E1	mm	33
	in.	1.30
LC	mm	206
	in.	8.11

LP	mm	= 190 + LC + X
	in.	= 7.48 + LC + X
M	mm	75
	in.	2.95
∅	mm	M5 X 12
	in.	M5 X 0.47
∅1	mm	8^{H7} X 2.1
	in.	8^{H7} X 0.08

Mounting and Clearance

Servo Motor Mounting

Standard servo motor mounting

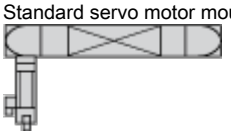

Servo motor mounted on the left

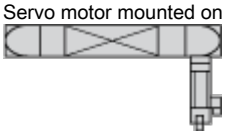

Performance Curves

Axis Positioning Time as a Function of the Stroke

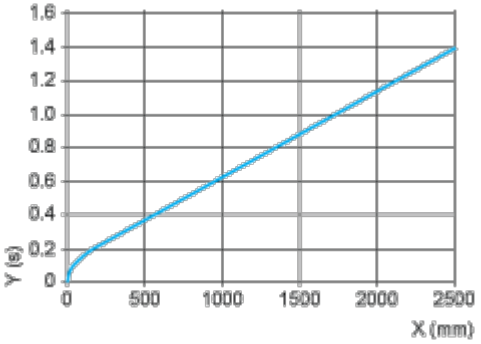

X : Stroke

Y : Positioning time

Technical Description
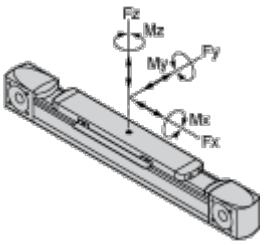
Forces and Torques Exerted on the Lexium PAS E Portal Axis