Product data sheet

Specifications

Green Premium™

portal axis PAS E - profile size 40x40mm - toothed belt - roller - stroke 250mm

PAS41E0250

Discontinued on: Mar 15, 2022

Discontinued

Product availability: Non-Stock - Not normally stocked in distribution facility

Main

Range Of Product	Lexium PAS E
Product Or Component Type	Portal axis
Product Specific Application	For 1 direction
Load Position	On carriage
Drive Type	Toothed belt
Type Of Guide	Roller

Complementary

Operating Position	Horizontal
Typlical Payload	8.82 lb(US) (4 kg)
Distance Per Revolution	3.31 in (84 mm)
Operating Force	300 N for Fx 660 N for Fy 430 N for Fz
Maximum Speed	6.56 ft/s (2 m/s)
Maximum Acceleration	49.21 ft/s² (15 m/s²)
Max. Drive Torque	35.40 lbf.in (4 N.m)
Max. Torque	<44.25 lbf.in (5 N.m) for Mx <97.36 lbf.in (11 N.m) for My <150.46 lbf.in (17 N.m) for Mz
Stroke	9.84 in (250 mm)
Product Weight	7.94 lb(US) (3.6 kg) at 0 stroke with carriage and motor 1.10 lb(US) (0.5 kg) of carriage 12.13 lb(US) (5.5 kg) total
Repeat Accuracy	+/- 0.05 mm
Profile Dimension	40 x 40 mm
Service Life	30000 km
Associated Module	PLE40 planetary gearbox 3:1 supplied) BSH0552P01A2A servo motor supplied) LXM32.U60N4 servo drive not supplied)

Ordering and shipping details

Category	US1PC5718232
Discount Schedule	PC57

Price is “List Price” and may be subject to a trade discount – check with your local distributor or retailer for actual price.

Disclaimer: This documentation is not intended as a substitute for and is not to be used for determining suitability or reliability of these products for specific user applications

Gtin	3606485236117
Returnability	No
Country Of Origin	DE

Packing Units

Unit Type Of Package 1	PCE
Number Of Units In Package 1	1
Package 1 Height	6.50 in (16.5 cm)
Package 1 Width	19.21 in (48.8 cm)
Package 1 Length	27.44 in (69.7 cm)
Package 1 Weight	12.10 lb(US) (5.487 kg)

Contractual warranty

Warranty	18 months

Sustainability

Green Premium™ label is Schneider Electric's commitment to delivering products with best-in-class environmental performance. Green Premium promises compliance with the latest regulations, transparency on environmental impacts, as well as circular and low-CO_2 products.

Guide to assessing product sustainability is a white paper that clarifies global eco-label standards and how to interpret environmental declarations.

Learn more about Green Premium >

Guide to assess a product's sustainability >

Transparency RoHS/REACh

Well-being performance

Reach Free Of Svhc	
Mercury Free	
Rohs Exemption Information	Yes
Pvc Free	

Certifications & Standards

Reach Regulation	REACh Declaration
Eu Rohs Directive	Pro-active compliance (Product out of EU RoHS legal scope)
China Rohs Regulation	China RoHS declaration
Environmental Disclosure	Product Environmental Profile
Circularity Profile	No need of specific recycling operations
California Proposition 65	WARNING: This product can expose you to chemicals including: Lead and lead compounds, which is known to the State of California to cause cancer and birth defects or other reproductive harm. For more information go to www.P65Warnings.ca.gov

Dimensions Drawings

Size Characteristics

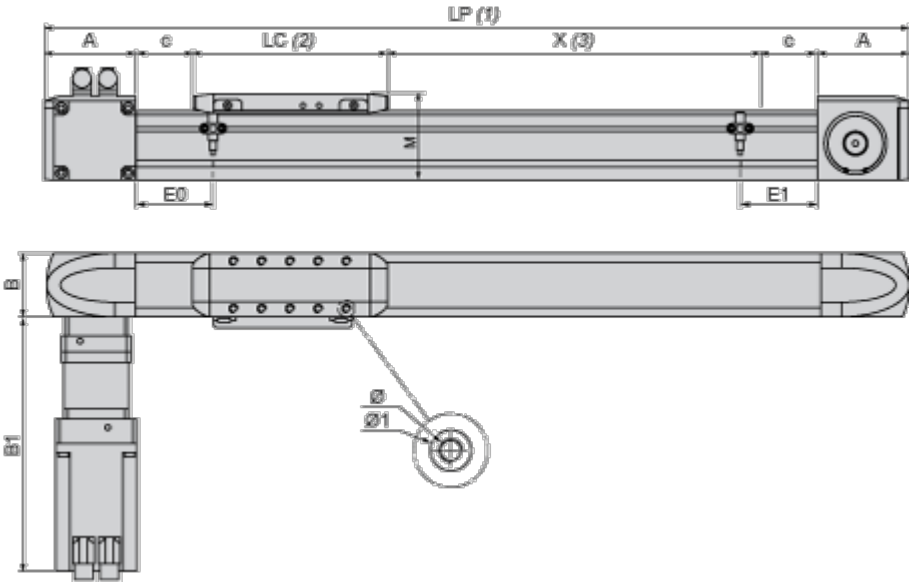

(1) LP : total length of axis

(2) LC : length of carriage

(3) X : Stroke, refer to product characteristics.

A	mm	53.5
	in.	2.11
B	mm	40
	in.	1.57
B1	mm	258
	in.	10.16
c	mm	10
	in.	0.39
E0	mm	25
	in.	0.98
E1	mm	25
	in.	0.98
LC	mm	200
	in.	7.87

LP	mm	= 127 + LC + X
	in.	= 5.00 + LC + X
M	mm	55
	in.	2.16
∅	mm	M5 X 12
	in.	M5 X 0.47
∅1	mm	8^{H7} X 2.1
	in.	8^{H7} X 0.08

Mounting and Clearance

Servo Motor Mounting

Standard servo motor mounting

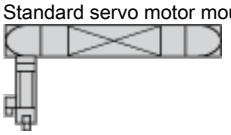

Servo motor mounted on the left

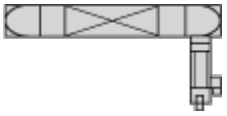

Performance Curves

Axis Positioning Time as a Function of the Stroke

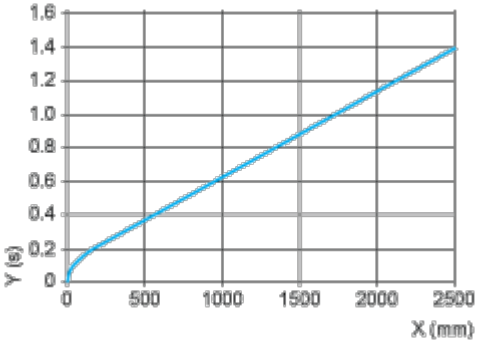

X : Stroke

Y : Positioning time

Technical Description
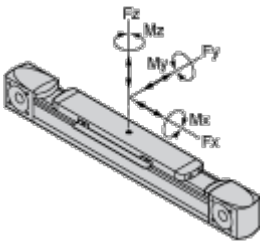
Forces and Torques Exerted on the Lexium PAS E Portal Axis