Product data sheet

Specifications

Panelboard interior, NQ, main lugs, 225A, Cu bus, 42 pole spaces, 3 phase, 4 wire, 240VAC, 48VDC

NQ442L2C

Product availability: Stock - Normally stocked in distribution facility

Price*: 1,551.00 USD

Main

Panelboard Type	Main lugs
Product Or Component Type	Interiors
Branch Circuit Breaker Type	QOB QOB-VH QHB
Busbar Material	Copper

Complementary

Number Of Spaces	42
Enclosure Nominal Height	38 in (965.20 mm)
Enclosure Nominal Width	20 in (508.00 mm)
Enclosure Nominal Depth	5.75 in (146.05 mm) NEMA 1 6.5 in (165.10 mm) NEMA 3R/5/12
Line Rated Current	225 A
[Iu] Rated Interrupted Current	10 kA 22 kA 65 kA
Number Of Phases	3 phase 4 wires
Voltage Rating	240 V AC 48 V DC
Connections - Terminals	Lug line AWG 6...350 kcmil aluminium Lug neutral AWG 6...350 kcmil aluminium
Tightening Torque	40.01…50.01 lbf.in (4.52…5.65 N.m) 0.02…0.10 in² (13.30…67.43 mm²) (AWG 6...AWG 2/0) 100.01 lbf.in (11.3 N.m) 0.02…0.10 in² (13.30…67.43 mm²) (AWG 6...AWG 2/0) 274.99 lbf.in (31.07 N.m) 0.02…0.27 in² (13.30…177.3 mm²) (AWG 6...350 kcmil) 274.99 lbf.in (31.07 N.m) 0.02…0.20 in² (13.30…126.7 mm²) (AWG 6...250 kcmil) 274.99 lbf.in (31.07 N.m) 0.17…0.24 in² (107.2…152 mm²) (AWG 4...300 kcmil)
Height	33.00 in (838.20 mm)
Width	10.44 in (265.18 mm)
Net Weight	19.36 lb(US) (8.78 kg)

Environment

Standards	CSA UL

Price is “List Price” and may be subject to a trade discount – check with your local distributor or retailer for actual price.

Disclaimer: This documentation is not intended as a substitute for and is not to be used for determining suitability or reliability of these products for specific user applications

Ordering and shipping details

Category	US1PE1A09151
Discount Schedule	PE1A
Gtin	785901507871
Returnability	Yes
Country Of Origin	US

Packing Units

Unit Type Of Package 1	PCE
Number Of Units In Package 1	1
Package 1 Height	6.30 in (16.0 cm)
Package 1 Width	14.17 in (36.0 cm)
Package 1 Length	38.58 in (98.0 cm)
Package 1 Weight	20.68 lb(US) (9.38 kg)

Contractual warranty

Warranty	18 months

Sustainability

Green Premium™ label is Schneider Electric's commitment to delivering products with best-in-class environmental performance. Green Premium promises compliance with the latest regulations, transparency on environmental impacts, as well as circular and low-CO_2 products.

Guide to assessing product sustainability is a white paper that clarifies global eco-label standards and how to interpret environmental declarations.

Learn more about Green Premium >

Guide to assess a product's sustainability >

Transparency RoHS/REACh

Well-being performance

- Reach Free Of Svhc
- Toxic Heavy Metal Free
- Mercury Free
- Rohs Exemption Information — Yes

Certifications & Standards

Reach Regulation	REACh Declaration
Eu Rohs Directive	Compliant with Exemptions
China Rohs Regulation	China RoHS declaration Product out of China RoHS scope. Substance declaration for your information.
Environmental Disclosure	Product Environmental Profile
Circularity Profile	No need of specific recycling operations
California Proposition 65	WARNING: This product can expose you to chemicals including: Nickel compounds, which is known to the State of California to cause cancer, and Bisphenol A (BPA), which is known to the State of California to cause birth defects or other reproductive harm. For more information go to www.P65Warnings.ca.gov

Dimensions Drawings

Approximate Dimensions

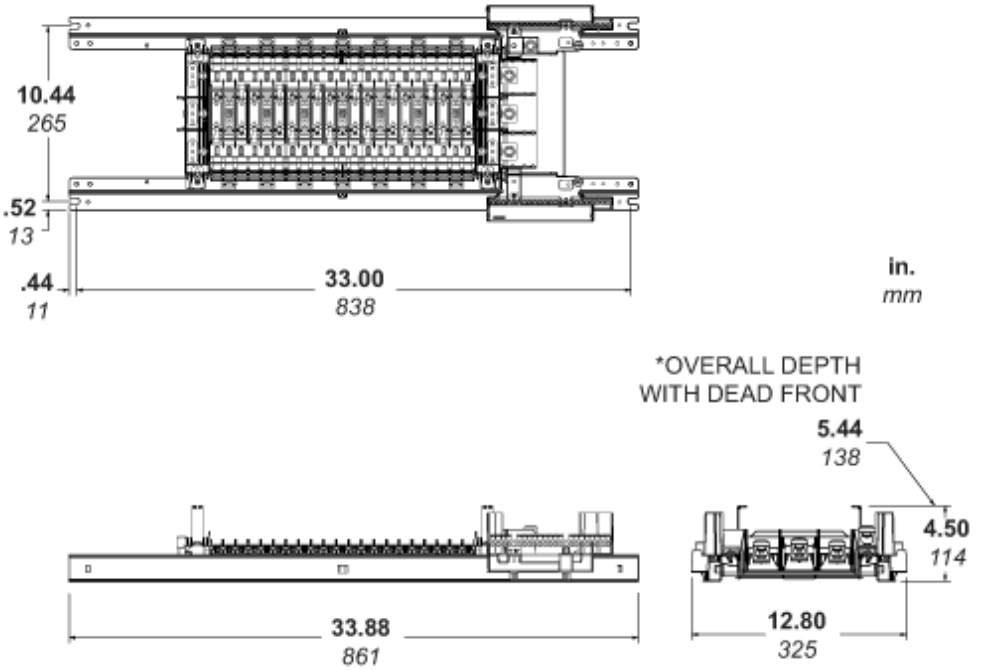

Catalog	Phase/Wire	Bus Thickness	Bus Material	Lug Size
NQ442L2C	3P 4W	.25	CU	#6–350 KCMIL
NQ42L2C	1P 3W	.25	CU	#6–350 KCMIL
NQ442L2	3P 4W	.25	AL	#6–350 KCMIL
NQ42L2	1P 3W	.25	AL	#6–350 KCMIL