Product data sheet

Specifications

Green Premium™

body for 2-speed motor switch - 3-pole - 60° - 12 A - for Ø 22 mm

K1F001P

Discontinued on: Oct 20, 2020

Discontinued

Main

Range Of Product	Harmony K
Product Or Component Type	Cam switch body
Component Name	K1
[Ith] Conventional Free Air Thermal Current	12 A
Sub-Assembly Composition	Contact blocks + fixing plate
Cam Switch Function	Pole change switches for 2-speed motor
Motor Type	2 separate windings
Off Position	With Off position
Switching Positions	Right: 0° - 60° - 120°
Product Mounting	Front mounting
Fixing Mode	Ø 22 mm hole
Bezel Material	Plastic

Complementary

Switching Angle	60 °
[Ui] Rated Insulation Voltage	690 V 3)IEC 60947-1
[Ithe] Conventional Enclosed Thermal Current	10 A
Rated Operational Power In W	10500 W AC-21, 500 - 660 V 3 phase IEC 947-3 1100 W AC-3, 230 V 3 phase IEC 947-3 1500 W AC-23A, 230 V 3 phase IEC 947-3 1500 W AC-3, 400 V 1 phase IEC 947-3 1500 W AC-3, 400 V 3 phase IEC 947-3 1500 W AC-3, 500 V 3 phase IEC 947-3 1500 W AC-3, 690 V 3 phase IEC 947-3 2200 W AC-23A, 400 V 3 phase IEC 947-3 2200 W AC-23A, 500 V 3 phase IEC 947-3 2200 W AC-23A, 690 V 3 phase IEC 947-3 4800 W AC-21, 230 V 3 phase IEC 947-3 600 W AC-3, 230 V 1 phase IEC 947-3 8300 W AC-21, 400 V 3 phase IEC 947-3
[Ie] Rated Operational Current Ac	1 A 500 V AC-15 IEC 947-5-1 2 A 400 V AC-15 IEC 947-5-1 3 A 230 V AC-15 IEC 947-5-1 1.8 A 690 V AC-3 3 phase IEC 947-3 2.8 A 500 V AC-3 3 phase IEC 947-3 2.8 A 690 V AC-23A 3 phase IEC 947-3 3.3 A 400 V AC-3 3 phase IEC 947-3 3.8 A 500 V AC-23A 3 phase IEC 947-3 4.6 A 230 V AC-3 3 phase IEC 947-3 4.8 A 400 V AC-23A 3 phase IEC 947-3 5.6 A 230 V AC-23A 3 phase IEC 947-3

Price is “List Price” and may be subject to a trade discount – check with your local distributor or retailer for actual price.

Disclaimer: This documentation is not intended as a substitute for and is not to be used for determining suitability or reliability of these products for specific user applications

Electrical Durability	1000000 cycles AC-15 1000000 cycles AC-21 500000 cycles AC-23 500000 cycles AC-3
Maximum Operating Rate	8333 cyc/mn AC-15 2.5 cyc/mn AC-21 2.5 cyc/mn AC-23 2.5 cyc/mn AC-3
Short-Circuit Current	10000 A
Short-Circuit Protection	16 A cartridge fuse gG
[Uimp] Rated Impulse Withstand Voltage	4 kV in isolating function 6 kV IEC 947-1
Contact Operation	Slow-break
Positive Opening	With
Electrical Connection	Captive screw clamp terminals flexible 2 x 1.5 mm² Captive screw clamp terminals solid 1 x 2.5 mm²
Mechanical Durability	1000000 cycles
Net Weight	0.31 lb(US) (0.14 kg)

Environment

Standards	CENELEC EN 50013 EN 60947-3 power circuit EN 60947-5-1 control circuit IEC 60947-3 power circuit IEC 60947-5-1 control circuit
Product Certifications	CSA 240 V 1 hp 1 phase CSA 240 V 3 hp 3 phase 2 UL 240 V 1 hp 3 phase UL 240 V 0.33 hp 1 phase 2
Protective Treatment	TC
Ambient Air Temperature For Operation	-13…131 °F (-25…55 °C)
Ambient Air Temperature For Storage	-40…158 °F (-40…70 °C)
Shock Resistance	30 gn IEC 68-2-27
Vibration Resistance	5 gn 10…150 Hz)IEC 68-2-6
Electrical Shock Protection Class	Class II IEC 536 Class II NF C 20-030

Ordering and shipping details

Category	18406-WORLD SERVICE PARTS(OTHER OP INT)
Discount Schedule	CS2
Gtin	3389110445749
Returnability	No

Contractual warranty

Warranty	18 months

Sustainability

Green Premium™ label is Schneider Electric's commitment to delivering products with best-in-class environmental performance. Green Premium promises compliance with the latest regulations, transparency on environmental impacts, as well as circular and low-CO_2 products.

Guide to assessing product sustainability is a white paper that clarifies global eco-label standards and how to interpret environmental declarations.

Learn more about Green Premium >

Guide to assess a product's sustainability >

Transparency RoHS/REACh

Well-being performance

Reach Free Of Svhc	
Toxic Heavy Metal Free	
Mercury Free	
Rohs Exemption Information	Yes

Certifications & Standards

Reach Regulation	REACh Declaration
Eu Rohs Directive	Pro-active compliance (Product out of EU RoHS legal scope) EU RoHS Declaration
China Rohs Regulation	China RoHS declaration
Environmental Disclosure	Product Environmental Profile
Weee	The product must be disposed on European Union markets following specific waste collection and never end up in rubbish bins.
Circularity Profile	No need of specific recycling operations
California Proposition 65	WARNING: This product can expose you to chemicals including: Nickel compounds, which is known to the State of California to cause cancer, and Di-isodecyl phthalate (DIDP), which is known to the State of California to cause birth defects or other reproductive harm. For more information go to www.P65Warnings.ca.gov

Dimensions Drawings

Body with Plastic Base

Front Mounting by Ø 22 mm/0.87 in. Hole

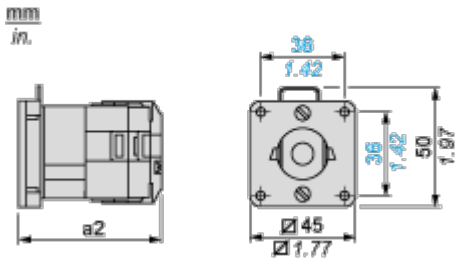

a2 69 mm/2.78 in.

Technical Description

Link Positions (Factory Mounted)

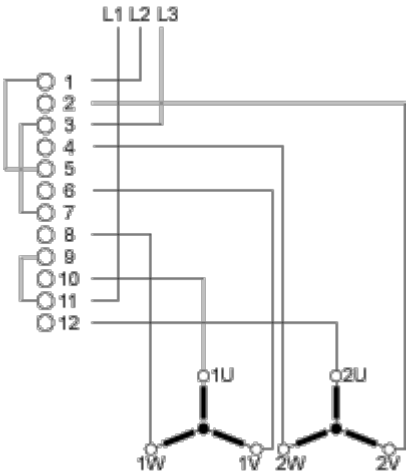

Angular Position of Switch

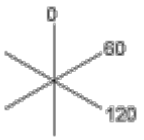

Switching Program

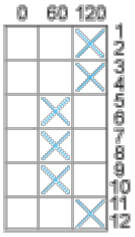

Convention Used for Switching Program Representation

Contact closed

Contact closed in 2 positions and maintained between the 2 positions

Sealed assembly for auto-maintain control

Overlapping contacts

Spring return position: for a switching angle of 90°, spring return is over 30° after the last position (for a maximum of 3 simultaneous contacts).
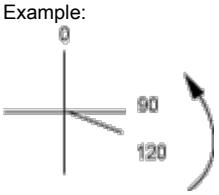
Example: