Product data sheet

Specifications

Circuit breaker enclosure, PowerPacT H/J, 15A to 250A, NEMA 3R, 14.47in W x 31.05in H x 6.28in D

J250R

Product availability: Stock - Normally stocked in distribution facility

Price*: 840.00 USD

Main

Breaker Compatibility	Circuit breaker H-Frame 15…250 A Circuit breaker J-Frame 15…250 A

Complementary

Height	31.05 in (788.67 mm)
Width	14.47 in (367.54 mm)
Depth	6.28 in (159.51 mm)

Environmental

Nema Degree Of Protection	NEMA 3R

Ordering and shipping details

Category	US10DE100030
Discount Schedule	0DE1
Gtin	785901607861
Returnability	Yes
Country Of Origin	MX

Packing Units

Unit Type Of Package 1	PCE
Number Of Units In Package 1	1
Package 1 Height	8.50 in (21.59 cm)
Package 1 Width	15.10 in (38.354 cm)
Package 1 Length	32.40 in (82.296 cm)
Package 1 Weight	33.96 lb(US) (15.405 kg)
Unit Type Of Package 2	PAL
Number Of Units In Package 2	12
Package 2 Height	39.00 in (99.06 cm)
Package 2 Width	40.00 in (101.6 cm)
Package 2 Length	48.00 in (121.92 cm)

Price is “List Price” and may be subject to a trade discount – check with your local distributor or retailer for actual price.

Disclaimer: This documentation is not intended as a substitute for and is not to be used for determining suitability or reliability of these products for specific user applications

Package 2 Weight	441.00 lb(US) (200.034 kg)

Contractual warranty

Warranty	18 months

Sustainability

Green Premium™ label is Schneider Electric's commitment to delivering products with best-in-class environmental performance. Green Premium promises compliance with the latest regulations, transparency on environmental impacts, as well as circular and low-CO_2 products.

Guide to assessing product sustainability is a white paper that clarifies global eco-label standards and how to interpret environmental declarations.

Learn more about Green Premium >

Guide to assess a product's sustainability >

Transparency RoHS/REACh

Well-being performance

Toxic Heavy Metal Free	
Mercury Free	
Rohs Exemption Information	Yes
Pvc Free	
Halogen Free Plastic Parts Product	

Certifications & Standards

Reach Regulation	REACh Declaration
Eu Rohs Directive	Compliant EU RoHS Declaration
China Rohs Regulation	China RoHS declaration Pro-active China RoHS declaration (out of China RoHS legal scope)
Environmental Disclosure	Product Environmental Profile
Circularity Profile	No need of specific recycling operations
California Proposition 65	WARNING: This product can expose you to chemicals including: Lead and lead compounds, which is known to the State of California to cause cancer and birth defects or other reproductive harm. For more information go to www.P65Warnings.ca.gov

Dimensions Drawings

Approximate Dimensions

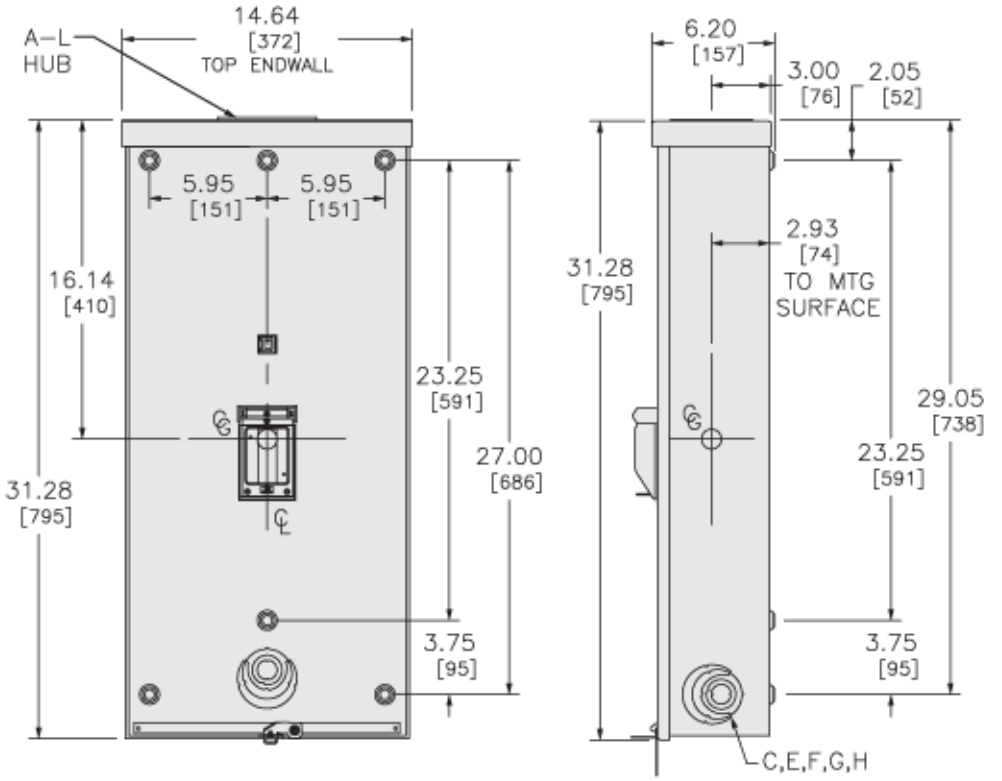

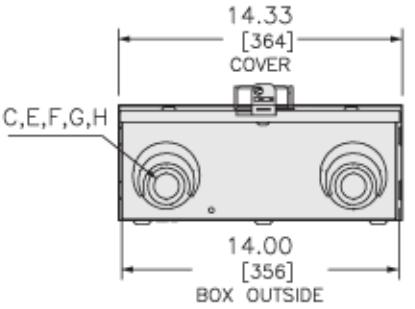

in.
[mm]

KNOCKOUTS				
SYMBOL	CONDUIT SIZE		DIAMETER	
	IN	MM	IN	MM
C	1.00	25	1.38	35
E	1.50	38	2.00	51
F	2.00	51	2.50	64
G	2.50	64	3.00	76
H	3.00	76	3.63	92

Connections and Schema

Connections and Wiring Diagrams

WIRING DIAGRAM

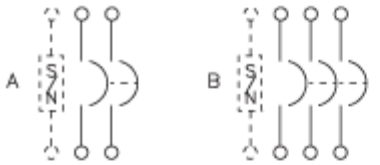

▲H150R AND J250R NEMA TYPE 3R

CIRCUIT BREAKER TERMINAL LUG DATA					
CIRCUIT BREAKER CATALOG NO. PREFIX	AMPERE RATING	CONDUCTORS PER PHASE	WIRE SIZE (AWG/KCMIL)		TYPE
			MAX	MIN	
HD, HG HJ, HL, HR	15–150	1	#3/0	#14	AL/CU
JD, JG JJ, JL, JR	150–175	1	#4/0	#4	AL/CU
	200–250	1	350	#3/0	

FIELD INSTALLABLE SOLID NEUTRAL ASSEMBLIES AND GROUND KIT						
CATALOG NUMBER	MAXIMUM AMPERE RATING	NUMBER OF TERMINALS	CONDUCTORS PER TERMINAL	WIRE SIZE (AWG/KCMIL)		TYPE
				MAX	MIN	
SN100FA	100A	2	1	#1/0	#14	CU
				#1/0	#12	AL
SN400LA	250A	2	1 OR 2	#600 #250	#1 #1	AL OR CU AL OR CU
		2	1	#300	#4	AL OR CU
PK0GTJ250	250A	2	1	#300	#6	AL OR CU
PK0GTH150	150A	2	1	#2	#14	AL OR CU

FOR 200% NEUTRALS USE SN400LA (AMP RANGE 100 TO 250, CU WIRE ONLY).

FIELD INSTALLABLE CIRCUIT BREAKER DATA										
CIRCUIT BREAKER CATALOG NO PREFIX	WIRING DIAG	AMPERE RATING	UL LISTED INTERRUPTING RATING RMS SYMMETRICAL AMPERES							
			AC VOLTAGE					DC VOLTAGE		
			240	480Y/277	480	600Y/347	600	125	250	500
▲HD JD	A,B A,B	15–150 150–250	25K 25K	18K 18K	18K 18K	14K 14K	14K 14K	20K 20K	20K 20K	– –
▲HG JG	A,B A,B	15–150 150–250	65K 65K	35K 35K	35K 35K	18K 18K	18K 18K	20K 20K	20K 20K	– –
HJ JJ	A,B A,B	15–150 150–250	100K 100K	65K 65K	65K 65K	25K 25K	25K 25K	20K 20K	20K 20K	– –
HL JL	A,B A,B	15–150 150–250	125K 125K	65K 65K	65K 65K	25K 25K	25K 25K	20K 20K	20K 20K	– –
HR JR	A,B A,B	15–150 150–250	125K 125K	65K 65K	65K 65K	25K 25K	25K 25K	20K 20K	20K 20K	– –

▲H150R SUITABLE ONLY FOR 2 POLE HD OR HG BREAKERS.