# Product data sheet

Specifications

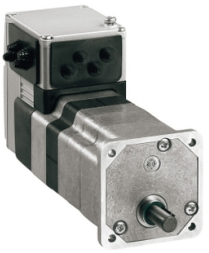

## brushless DC motor, Lexium ILA ILE ILS, 24 to 48V, EtherNet IP interface, industrial connector, 174mm, 115:1

ILE2K661PC1A8

**Product availability: Non-Stock - Not normally stocked in distribution facility**

**Price*: 1,940.00 USD**

## Main

| | |
|---|---|
| **Range Of Product** | Lexium integrated drive |
| **Product Or Component Type** | Motion integrated drive |
| **Device Short Name** | ILE |
| **Motor Type** | Brushless DC motor |
| **Number Of Motor Poles** | 6 |
| **Phase** | Single phase |
| **[Us] Rated Supply Voltage** | 48 V<br>24 V |
| **Network Type** | DC |
| **Communication Interface** | Ethernet/IP, Integrated |
| **Length** | 9.02 in (229 mm) |
| **Winding Type** | Medium speed of rotation and medium torque |
| **Electrical Connection** | Industrial connector |
| **Holding Brake** | Without |
| **Gear Box Type** | Worm gear, 3 stages |
| **Reduction Ratio** | 115:1 (3675:32) |
| **Nominal Speed** | 35 rpm 24 V<br>35 rpm 48 V |
| **Nominal Torque** | 93.82 lbf.in (10.6 N.m) 24 V<br>93.82 lbf.in (10.6 N.m) 48 V |

## Complementary

| | |
|---|---|
| **Transmission Rate** | 125, 250, 500 kbauds |
| **Mounting Support** | Flange |
| **Motor Flange Size** | 2.60 in (66 mm) |
| **Number Of Motor Stacks** | 1 |
| **Centring Collar Diameter** | 1.42 in (36 mm) |
| **Number Of Mounting Holes** | 2 |
| **Mounting Holes Diameter** | 0.17 in (4.4 mm) |
| **Feedback Type** | BLDC encoder |

Price is “List Price” and may be subject to a trade discount – check with your local distributor or retailer for actual price.

Disclaimer: This documentation is not intended as a substitute for and is not to be used for determining suitability or reliability of these products for specific user applications

| | |
|---|---|
| **Shaft End** | Hole |
| **Second Shaft** | Without second shaft end |
| **Supply Voltage Limits** | 18…55.2 V |
| **Current Consumption** | 7000 mA peak<br>5500 mA maximum continuous |
| **Associated Fuse Rating** | 16 A |
| **Commissioning Interface** | RS485 Modbus TCP 9.6, 19.2 and 38.4 kbauds) |
| **Input/Output Type** | 4 signals (each be used as input or output) |
| **Voltage State 0 Guaranteed** | -3...4.5 V |
| **Voltage State 1 Guaranteed** | 15...30 V |
| **Discrete Input Current** | 10 mA at 24 V on/STO_A safety input<br>3 mA at 24 V on/STO_B safety input<br>2 mA at 24 V 24 V signal interface |
| **Discrete Output Voltage** | 23...25 V |
| **Maximum Switching Current** | 100 mA per output<br>200 mA total |
| **Protection Type** | Overload of output voltage<br>Safe torque off<br>Short circuit of the output voltage |
| **Maximum Supply Current** | 0.1 A power stage disabled)<br>6.8 A 24 V<br>2.9 A 48 V |
| **Nominal Output Power** | 37 W 24 V<br>39 W 48 V |
| **Peak Stall Torque** | 218.79 lbf.in (24.72 N.m) 24 V<br>218.79 lbf.in (24.72 N.m) 48 V |
| **Continuous Stall Torque** | 123.91 lbf.in (14 N.m) |
| **Detent Torque** | 147.81 lbf.in (16.7 N.m) |
| **Speed Feedback Resolution** | 12 points/turn motor<br>0.26° gearbox output |
| **Accuracy Error** | +/- 1 point |
| **Rotor Inertia** | 1980 kg.cm² |
| **Maximum Mechanical Speed** | 44 rpm |
| **Maximum Radial Force Fr** | 200 N |
| **Maximum Axial Force Fa** | 80 N |
| **Service Life In Hours** | 9000 h bearing |
| **Marking** | CE |
| **Type Of Cooling** | Natural convection |
| **Net Weight** | 5.07 lb(US) (2.3 kg) |

# Environment

| | |
|---|---|
| **Standards** | IEC 50178<br>EN 61800-3:2001, second environment<br>IEC 60072-1<br>EN 61800-3 : 2001-02<br>IEC 50347<br>IEC 61800-3<br>IEC 61800-3, Ed 2 |

| | |
|---|---|
| **Product Certifications** | TÜV<br>UL<br>cUL |
| **Ambient Air Temperature For Operation** | 104…131 °F (40…55 °C) with power derating of 2 % per °C)<br>32…104 °F (0…40 °C) without derating) |
| **Permissible Ambient Air Temperature Around The Device** | 221 °F (105 °C) power amplifier<br>230 °F (110 °C) motor |
| **Ambient Air Temperature For Storage** | -13…158 °F (-25…70 °C) |
| **Operating Altitude** | <= 3280.84 ft (1000 m) without derating |
| **Relative Humidity** | 15…85 % without condensation |
| **Vibration Resistance** | 20 m/s² 10…500 Hz) 10 cycles IEC 60068-2-6 |
| **Shock Resistance** | 150 m/s² 1000 shocks IEC 60068-2-29 |
| **Ip Degree Of Protection** | IP41 shaft bushing: conforming to IEC 60034-5<br>IP54 total except shaft bushing: conforming to IEC 60034-5 |

## Ordering and shipping details

| | |
|---|---|
| **Category** | US1PC5618288 |
| **Discount Schedule** | PC56 |
| **Gtin** | 3606485204840 |
| **Returnability** | No |
| **Country Of Origin** | DE |

## Packing Units

| | |
|---|---|
| **Unit Type Of Package 1** | PCE |
| **Number Of Units In Package 1** | 1 |
| **Package 1 Height** | 4.33 in (11.0 cm) |
| **Package 1 Width** | 7.48 in (19.0 cm) |
| **Package 1 Length** | 15.55 in (39.5 cm) |
| **Package 1 Weight** | 5.83 lb(US) (2.646 kg) |

## Contractual warranty

| | |
|---|---|
| **Warranty** | 18 months |

## Sustainability

**Green Premium™ label** is Schneider Electric's commitment to delivering products with best-in-class environmental performance. Green Premium promises compliance with the latest regulations, transparency on environmental impacts, as well as circular and low-$CO_2$ products.

**Guide to assessing product sustainability** is a white paper that clarifies global eco-label standards and how to interpret environmental declarations.

Learn more about Green Premium >

Guide to assess a product's sustainability >

Transparency RoHS/REACh

## Well-being performance

| | |
|---|---|
| Mercury Free | |
| Rohs Exemption Information | Yes |
| Pvc Free | |

## Certifications & Standards

| | |
|---|---|
| **Reach Regulation** | REACh Declaration |
| **Eu Rohs Directive** | Pro-active compliance (Product out of EU RoHS legal scope) |
| **China Rohs Regulation** | China RoHS declaration |
| **Environmental Disclosure** | Product Environmental Profile |
| **Weee** | The product must be disposed on European Union markets following specific waste collection and never end up in rubbish bins. |
| **Circularity Profile** | End of Life Information |
| **California Proposition 65** | WARNING: This product can expose you to chemicals including: Lead and lead compounds, which is known to the State of California to cause cancer and birth defects or other reproductive harm. For more information go to www.P65Warnings.ca.gov |

## Dimensions Drawings

### Integrated Drive with Worm Gear

### Dimensions

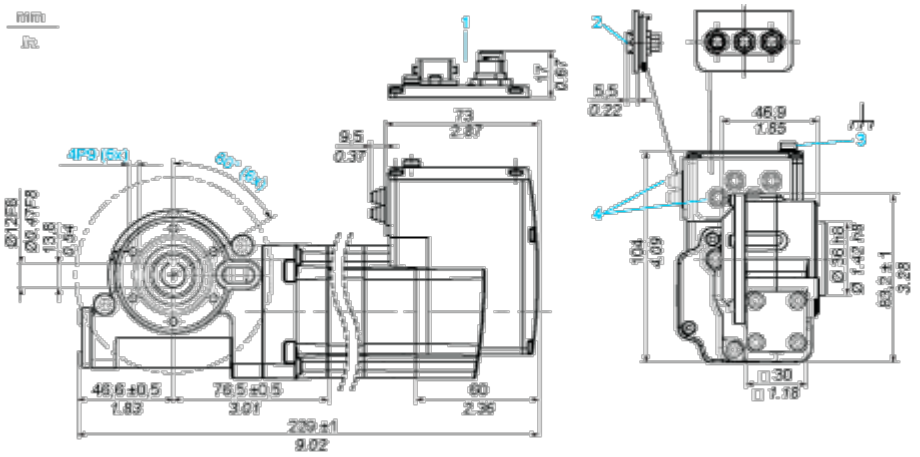


1 Option: industrial connectors

2 Accessories: I/O signal insert with industrial connectors

3 Earth (ground) terminal

4 Accessories: cable entries Ø = 3 ... 9 mm/0.12 ... 0.35 in.

Connections and Schema

**Connection Example with 4 I/O Signals**

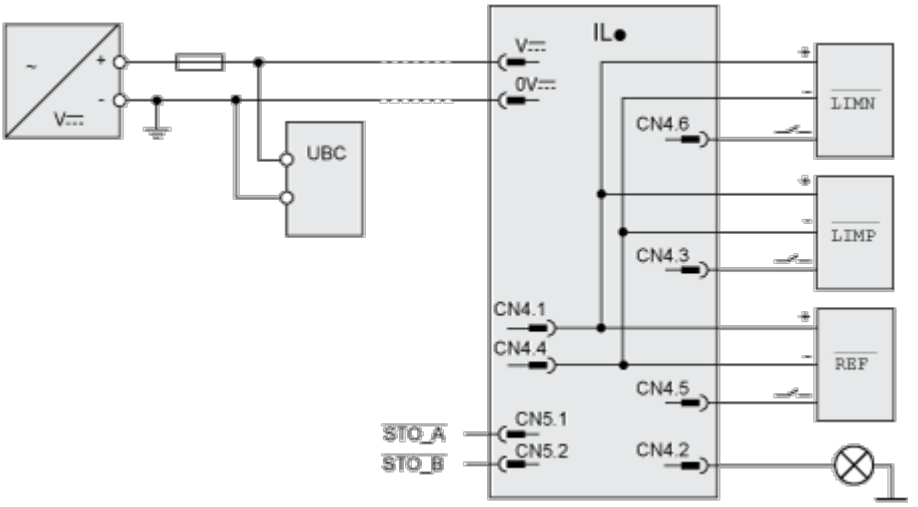

## Performance Curves

### Torque Characteristics

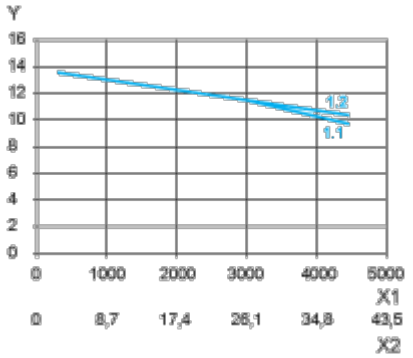


X1 Speed of rotation of motor in rpm

X2 Speed of rotation of gearing in rpm

Y Torque in Nm

1.1 Max. torque at 24 V

1.2 Max. torque at 48 V