Product data sheet

Specifications

Green Premium™

Multi touch screen, Harmony iPC, S Panel PC Perf. SSD W19â€ DC Win 10 IoT Enterprise

HMIPSPS952D180L

Discontinued on: Sep 15, 2023

To be end-of-service on: Dec 31, 2024

Discontinued

Product availability: Non-Stock - Not normally stocked in distribution facility

Main

Range Of Product	Harmony iPC
Product Or Component Type	Multi-touch screen
Processor Name	Intel Core i3 4010U at 1.7 GHz
Chipset Type	Intel QM87
Free Slots	1 Internal SATA HDD/SSD 1 CFast
Display Size	18.5 inch
Display Colour	16777216 colors
Luminance	27.87 fc (300 cd/m²)
Pixel Resolution	4096 x 4096
Video Controller Type	Intel HD Graphics 4400
Operating System	Windows 10 IoT Enterprise 64 bitmulti-language
Software Package	EcoStruxture secure connect advisor annual subscription cyber security license not included EcoStruxure Operator Terminal Expert run time HMI license not included EcoStruxure Machine SCADA Expert run time HMI/SCADA on configured offer only EcoStruxure augmented operator advisor server augmented operator license not included Vijeo Citect DVD SCADA license not included

Complementary

Number Of Points	5
Terminal Type	Touchscreen display
Memory Type	8 GB RAM DDR3 internal
Data Storage Equipment	256 GB back side SSD 1500000 h
Aspect Ratio	16:9
Display Type	Colour TFT LCD LED
Display Resolution	1366 x 768 pixels WXGA
Backlight Lifespan	50000 hours
View Angle Horizontal X Vertical	150 x 140°
Touch Panel	Projected capacitive technology (PCT)

Price is “List Price” and may be subject to a trade discount – check with your local distributor or retailer for actual price.

Disclaimer: This documentation is not intended as a substitute for and is not to be used for determining suitability or reliability of these products for specific user applications

Type Of Cooling	Passive Fanless
Watchdog Timer	1…255 ms
Electrical Connection	Connector, connector type: SMA, 3 ways
Number Of Slots	1 mini PCI Express full-size
[Us] Rated Supply Voltage	24 V DC +/- 20 % 100...240 V AC with additional adaptor HMIYPSPMAC1
Power Consumption In W	18…60 W
Mechanical Robustness	Hardness anti-scratch 7H
Local Signalling	buzzer for on LED (green) for stand-by LED (orange)
Function Available	Operate with water on screen
Width	19.21 in (488 mm)
Height	12.17 in (309 mm)
Depth	2.23 in (56.7 mm)
Cut-Out Dimensions	479.3 (+/- 1) x 300.3 (+/- 0.7)
Net Weight	15.43 lb(US) (7 kg)
Display Size	19" wide multi-touch
Main Type	Performance

Environment

Ip Degree Of Protection	IP66 front panel:
Product Certifications	CE C-tick CCC EAC RCM AS/NZS
Standards	UL 60950 CISPR 11 IEC 61000-6-4 IEC 61000-6-2 FCC Part 15 class A CSA C22.2 No. 60950 IEC 60950
Directives	2004/108/EC - electromagnetic compatibility 2006/95/EC - low voltage directive
Pollution Degree	2
Ambient Air Temperature For Operation	32…131 °F (0…55 °C) SSD 32…131 °F (0…55 °C) Cfast card 32…113 °F (0…45 °C) HDD 32…113 °F (0…45 °C) Mini PCIe
Ambient Air Temperature For Storage	-4…140 °F (-20…60 °C)
Relative Humidity	10…95 % non-condensing
Operating Altitude	2000
Vibration Resistance	1 gn 5…500 Hz)HDD 2 gn 5…500 Hz)SSD 2 gn 5…500 Hz)Cfast card

Ordering and shipping details

Category	US10MC322575
Discount Schedule	0MC3
Gtin	3606480929069
Returnability	No
Country Of Origin	US

Packing Units

Unit Type Of Package 1	PCE
Number Of Units In Package 1	1
Package 1 Height	19.49 in (49.5 cm)
Package 1 Width	6.30 in (16.0 cm)
Package 1 Length	26.97 in (68.5 cm)
Package 1 Weight	13.23 lb(US) (6.0 kg)

Sustainability

Green Premium™ label is Schneider Electric's commitment to delivering products with best-in-class environmental performance. Green Premium promises compliance with the latest regulations, transparency on environmental impacts, as well as circular and low-CO_2 products.

Guide to assessing product sustainability is a white paper that clarifies global eco-label standards and how to interpret environmental declarations.

Learn more about Green Premium >

Guide to assess a product's sustainability >

Transparency RoHS/REACh

Well-being performance

- Reach Free Of Svhc
- Mercury Free
- Rohs Exemption Information — Yes

Certifications & Standards

Reach Regulation	REACh Declaration
Eu Rohs Directive	Pro-active compliance (Product out of EU RoHS legal scope)
China Rohs Regulation	China RoHS declaration
Environmental Disclosure	Product Environmental Profile
Weee	The product must be disposed on European Union markets following specific waste collection and never end up in rubbish bins.
Circularity Profile	End of Life Information
California Proposition 65	WARNING: This product can expose you to chemicals including: Lead and lead compounds, which is known to the State of California to cause cancer and birth defects or other reproductive harm. For more information go to www.P65Warnings.ca.gov

Dimensions Drawings

Dimensions

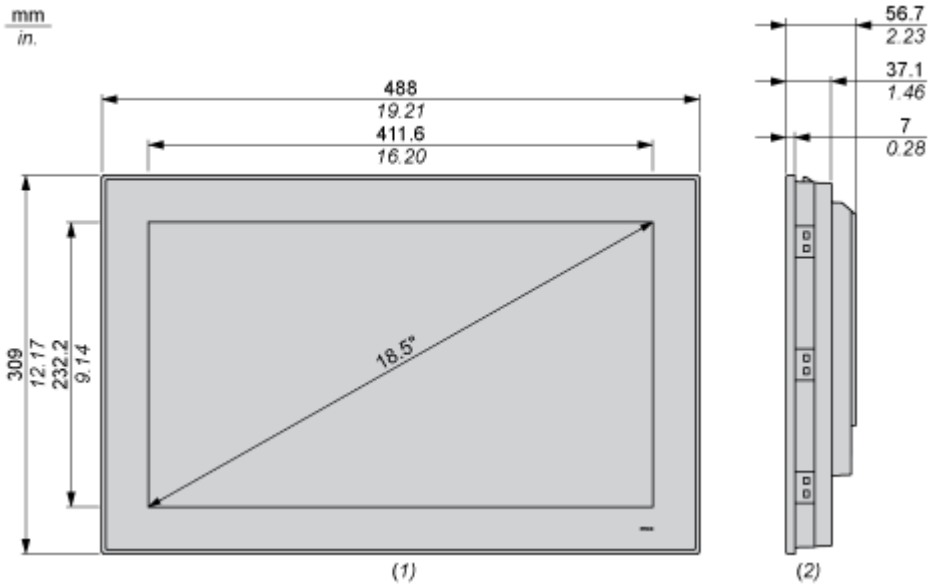

(1) Front view

(2) Right view

Mounting and Clearance

Spacing Requirements

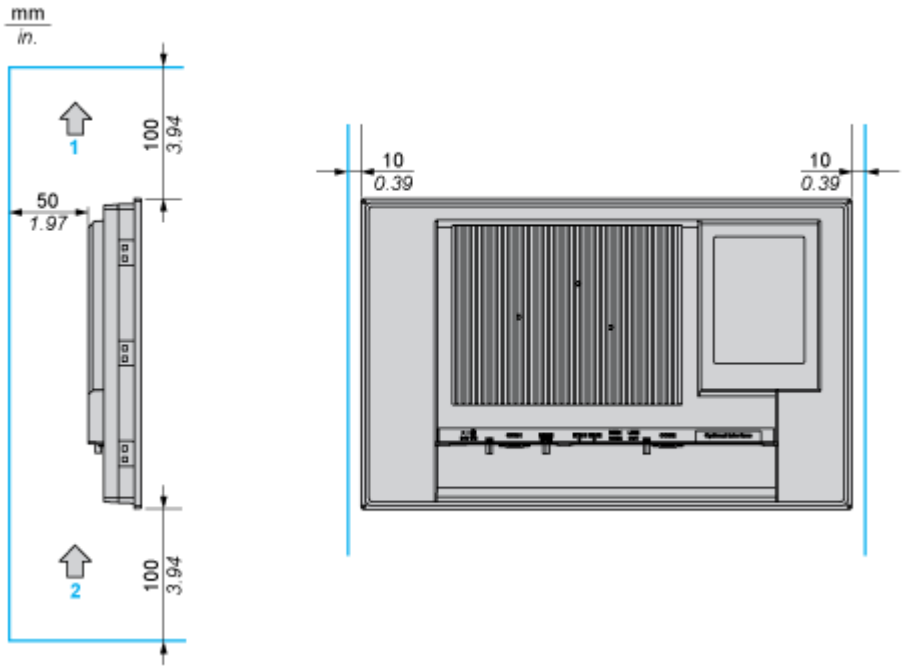

1 : Air out

2 : Air in

Mounting Orientation

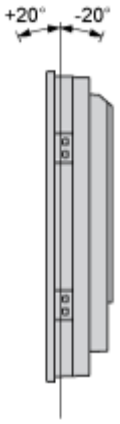

Panel Cut Dimensions

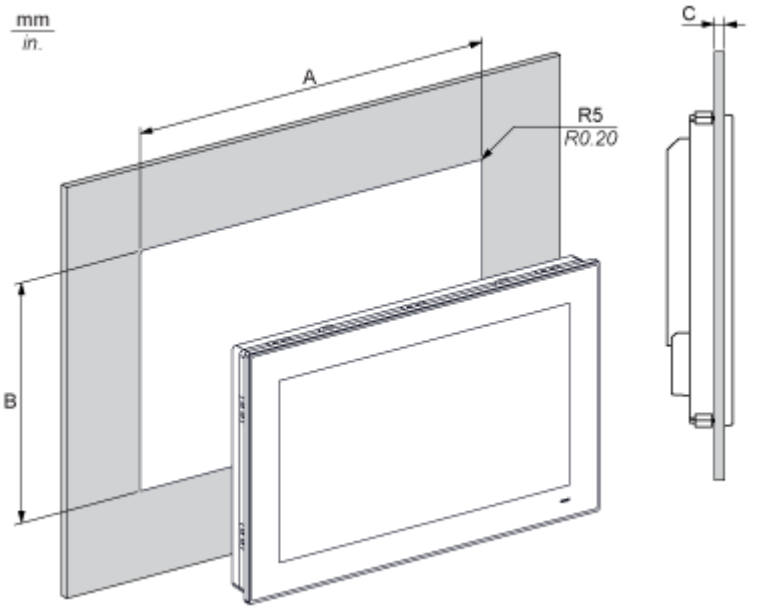

A		B		C		R	
mm	in.	mm	in.	mm	in.	mm	in.
479.3	18.87	300.3	11.82	2...6	0.08...0.23	5	0.20