Product data sheet

Specifications

multi touch screen, Harmony iPC, S panel PC optimized, 32GB back side CFast card, 15inch wide display

HMIPSOC752D1W01

Product availability: Non-Stock - Not normally stocked in distribution facility

Price*: 3,544.58 USD

Main

Range Of Product	Harmony iPC
Product Or Component Type	Multi-touch screen
Processor Name	Intel Atom E3827 dual core at 1.75 GHz
Chipset Type	Intel Atom SoC
Free Slots	1 CFast
Display Size	15.6 inch
Display Colour	16777216 colors
Luminance	27.87 fc (300 cd/m²)
Pixel Resolution	4096 x 4096
Video Controller Type	Intel HD Graphics
Operating System	WES 7 Premium SP1 64-bitmulti-language
Software Package	EcoStruxture secure connect advisor annual subscription cyber security license not included EcoStruxure Operator Terminal Expert run time HMI license not included EcoStruxure Machine SCADA Expert run time HMI/SCADA on configured offer only EcoStruxure augmented operator advisor server augmented operator license not included

Complementary

Number Of Points	5
Terminal Type	Touchscreen display
Memory Type	4 GB RAM DDR3 internal
Data Storage Equipment	32 GB back side CFast card
Aspect Ratio	16:9
Display Type	LED Colour TFT LCD
Display Resolution	1366 x 768 pixels WXGA
Backlight Lifespan	50000 hours
View Angle Horizontal X Vertical	150 x 140°
Touch Panel	Projected capacitive technology (PCT)
Type Of Cooling	Passive Fanless

Price is “List Price” and may be subject to a trade discount – check with your local distributor or retailer for actual price.

Disclaimer: This documentation is not intended as a substitute for and is not to be used for determining suitability or reliability of these products for specific user applications

Watchdog Timer	1…255 ms
[Us] Rated Supply Voltage	24 V DC +/- 20 % 100...240 V AC with additional adaptor HMIYPSOMAC1
Line Rated Current	1.7 A
Mechanical Robustness	Hardness anti-scratch 7H
Local Signalling	buzzer for on LED (green) for stand-by LED (orange)
Function Available	Operate with water on screen
Width	16.52 in (419.7 mm)
Height	10.59 in (269 mm)
Depth	2.44 in (61.9 mm)
Cut-Out Dimensions	412.4 (+/- 0.7) x 261.7 (+/- 0.4)
Net Weight	8.60 lb(US) (3.9 kg)
Display Size	15" wide multi-touch
Main Type	Optimised

Environment

Ip Degree Of Protection	IP66 front panel:
Product Certifications	RCM AS/NZS C-tick CE CCC EAC
Standards	FCC Part 15 class A IEC 61000-6-4 UL 60950 IEC 61000-6-2 IEC 60950 CISPR 11 CSA C22.2 No. 60950
Directives	2006/95/EC - low voltage directive 2004/108/EC - electromagnetic compatibility
Pollution Degree	2
Ambient Air Temperature For Operation	32…131 °F (0…55 °C) SSD 32…131 °F (0…55 °C) Cfast card 32…113 °F (0…45 °C) HDD 32…113 °F (0…45 °C) Mini PCIe
Ambient Air Temperature For Storage	-4…140 °F (-20…60 °C)
Relative Humidity	10…95 % non-condensing
Operating Altitude	2000
Vibration Resistance	1 gn 5…500 Hz)HDD 2 gn 5…500 Hz)SSD 2 gn 5…500 Hz)Cfast card

Ordering and shipping details

Category	US10MC322575
Discount Schedule	0MC3
Gtin	3606480853418
Returnability	No

Country Of Origin	US

Packing Units

Unit Type Of Package 1	PCE
Number Of Units In Package 1	1
Package 1 Height	2.44 in (6.2 cm)
Package 1 Width	10.59 in (26.9 cm)
Package 1 Length	16.54 in (42.0 cm)
Package 1 Weight	8.82 lb(US) (4.0 kg)
Unit Type Of Package 2	P12
Number Of Units In Package 2	6
Package 2 Height	31.50 in (80 cm)
Package 2 Width	41.34 in (105 cm)
Package 2 Length	49.21 in (125 cm)
Package 2 Weight	108.03 lb(US) (49 kg)

Sustainability

Green Premium™ label is Schneider Electric's commitment to delivering products with best-in-class environmental performance. Green Premium promises compliance with the latest regulations, transparency on environmental impacts, as well as circular and low-CO_2 products.

Guide to assessing product sustainability is a white paper that clarifies global eco-label standards and how to interpret environmental declarations.

Learn more about Green Premium >

Guide to assess a product's sustainability >

Transparency RoHS/REACh

Well-being performance

- Reach Free Of Svhc
- Mercury Free
- Rohs Exemption Information — Yes

Certifications & Standards

Reach Regulation	REACh Declaration
Eu Rohs Directive	Pro-active compliance (Product out of EU RoHS legal scope)
China Rohs Regulation	China RoHS declaration
Environmental Disclosure	Product Environmental Profile
Weee	The product must be disposed on European Union markets following specific waste collection and never end up in rubbish bins.
Circularity Profile	End of Life Information
California Proposition 65	WARNING: This product can expose you to chemicals including: Lead and lead compounds, which is known to the State of California to cause cancer and birth defects or other reproductive harm. For more information go to www.P65Warnings.ca.gov

Dimensions Drawings

Dimensions

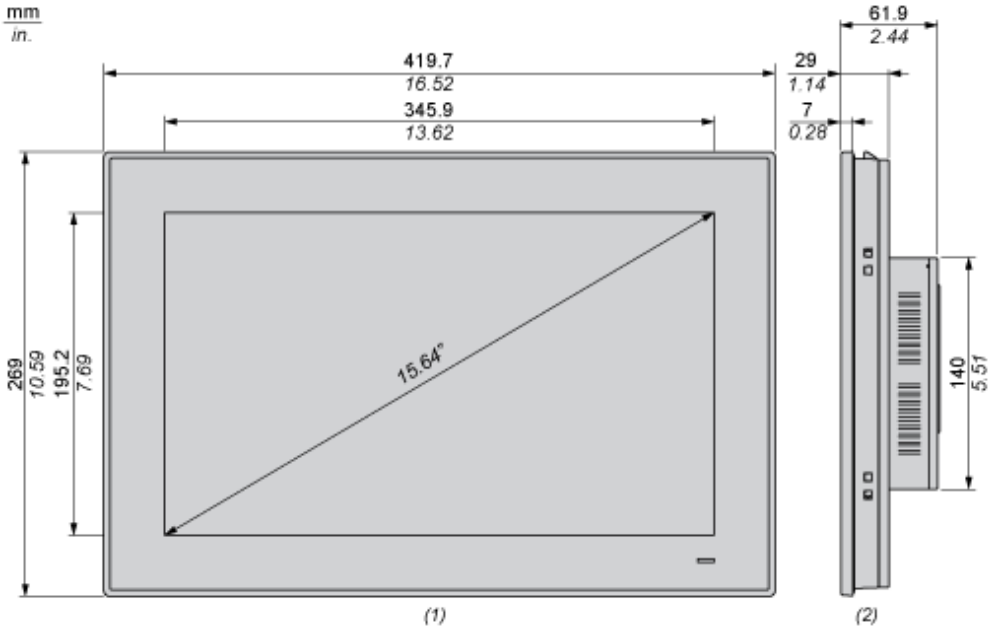

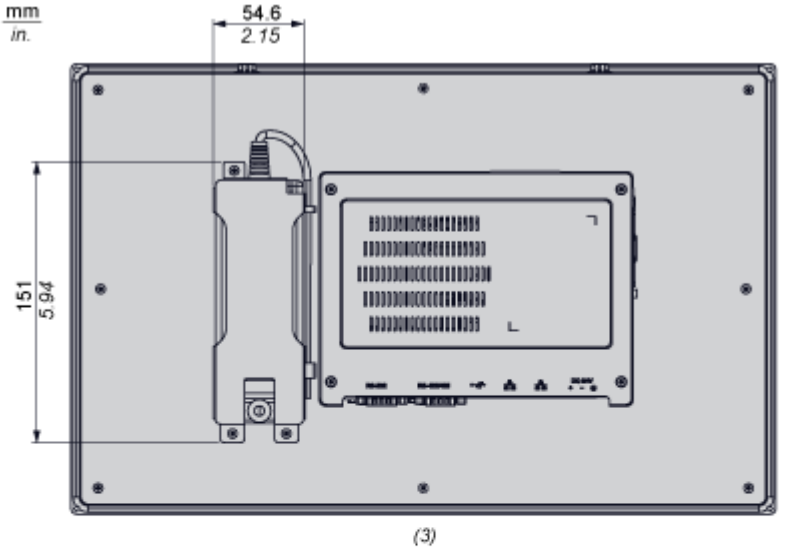

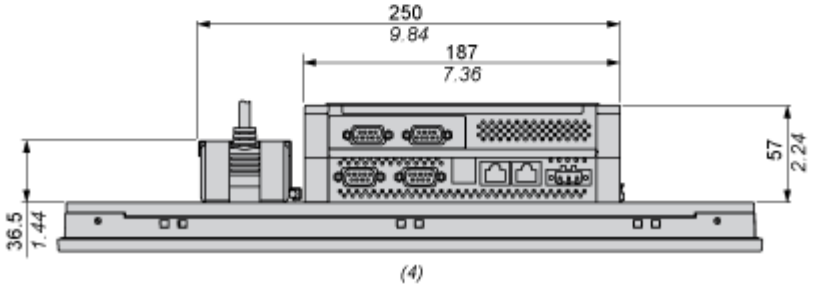

(1) Front view

(2) Right view

(3) Back view

(4) Bottom view

Mounting and Clearance

Spacing Requirements

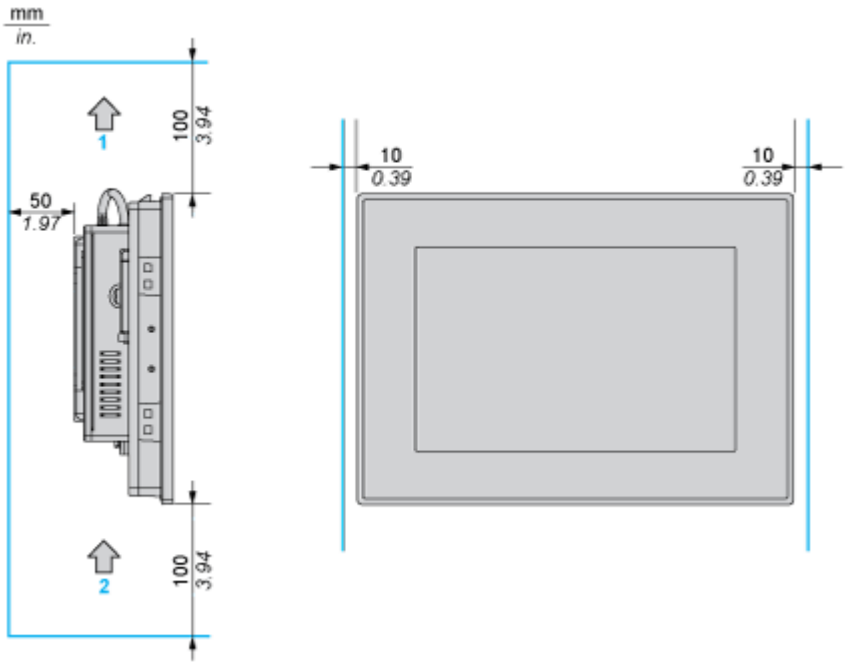

1 : Air out

2 : Air in

Mounting Orientation

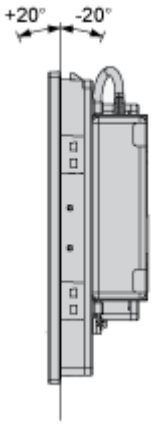

Panel Cut Dimensions

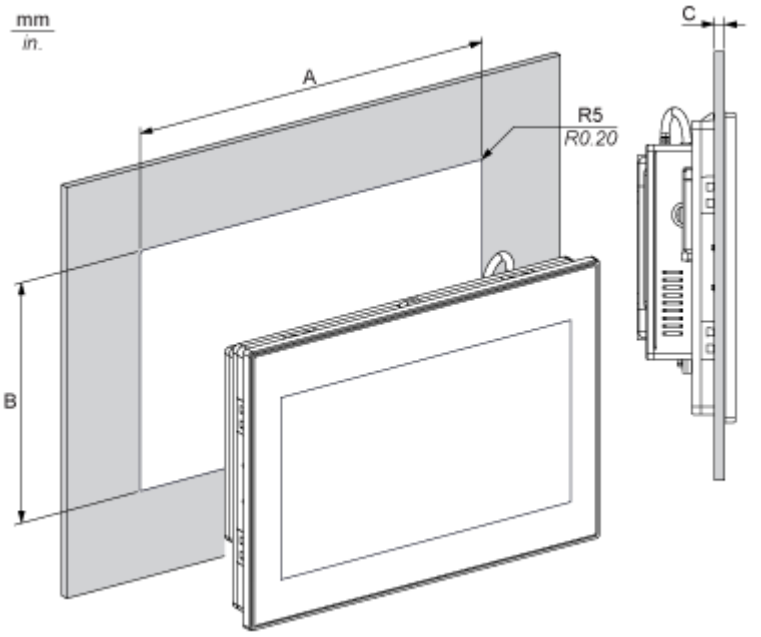

A		B		C		R	
mm	in.	mm	in.	mm	in.	mm	in.
412.4	16.24	261.7	10.30	2...6	0.08...0.23	5	0.20