Product data sheet

Specifications

flat screen, Harmony GTU, 15inch wide display, 1366 x 768pixels FWXGA

HMIDT752

Product availability: Stock - Normally stocked in distribution facility

Price*: 3,700.00 USD

Main

Range Of Product	Harmony GTU
Product Or Component Type	Flat screen
Terminal Type	Touchscreen display
[Us] Rated Supply Voltage	12...24 V DC power supply
Supply Voltage Limits	10.8…28.8 V
Power Consumption In W	17 W
Inrush Current	30 A

Complementary

Integrated Connection Type	USB 2.0 type A USB 2.0 type mini B
Touchscreen Resolution	2048 x 2048
Pixel Resolution	1366 x 768
Display Size	15.6 inch
Aspect Ratio	4:3
Display Type	Colour TFT LCD
Display Resolution	1366 x 768 pixels FWXGA
Display Colour	16 million colours
Backlight Lifespan	50000 hours
Touch Panel	Multi-touch projected capactive technology (PCT) 50000000 cycles
Function Available	Brightness sensor
Type Of Cooling	Natural convection
Type Of Installation	Indoor installation
Cut-Out Dimensions	396 (+ 1/- 0) x 277 (+ 1/- 0) mm
Width	16.30 in (414 mm)
Height	11.61 in (295 mm)
Depth	2.72 in (69 mm)
Net Weight	11.02 lb(US) (5 kg)

Environment

Price is “List Price” and may be subject to a trade discount – check with your local distributor or retailer for actual price.

Disclaimer: This documentation is not intended as a substitute for and is not to be used for determining suitability or reliability of these products for specific user applications

Ip Degree Of Protection	Front panel IP66 Front panel IP67
Nema Degree Of Protection	NEMA 4X front panel
Standards	UL 508 ANSI/ISA 12-12-01 Class I division 2 CSA C22.2 No 213 CSA C22.2 No 142 IEC 61132-2
Product Certifications	KC CE RCM CULus UKCA UKEX
Ambient Air Temperature For Operation	32…131 °F (0…55 °C) IEC 61131-2
Ambient Air Temperature For Storage	-4…140 °F (-20…60 °C)
Relative Humidity	10…90 % non-condensing
Operating Altitude	6561.68 ft (2000 m)
Vibration Resistance	3.5 mm constant amplitude 5…9 Hz) IEC 61131-2 9.8 m/s² 9…150 Hz) IEC 61131-2
Shock Resistance	147 m/s²IEC 61131-2
Electromagnetic Compatibility	Electrostatic discharge immunity test level 3 conforming to IEC 61000-4-2

Ordering and shipping details

Category	US10MC222567
Discount Schedule	0MC2
Gtin	3606481203465
Returnability	Yes
Country Of Origin	US

Packing Units

Unit Type Of Package 1	PCE
Number Of Units In Package 1	1
Package 1 Height	6.69 in (17.000 cm)
Package 1 Width	16.54 in (42.000 cm)
Package 1 Length	20.67 in (52.500 cm)
Package 1 Weight	12.07 lb(US) (5.474 kg)
Unit Type Of Package 2	P12
Number Of Units In Package 2	14
Package 2 Height	35.43 in (90.000 cm)
Package 2 Width	31.50 in (80.000 cm)
Package 2 Length	47.24 in (120.000 cm)
Package 2 Weight	220.10 lb(US) (99.836 kg)

Sustainability

Green Premium™ label is Schneider Electric's commitment to delivering products with best-in-class environmental performance. Green Premium promises compliance with the latest regulations, transparency on environmental impacts, as well as circular and low-CO_2 products.

Guide to assessing product sustainability is a white paper that clarifies global eco-label standards and how to interpret environmental declarations.

Learn more about Green Premium >

Guide to assess a product's sustainability >

Transparency RoHS/REACh

Well-being performance

Mercury Free

Rohs Exemption Information	Yes

Certifications & Standards

Reach Regulation	REACh Declaration
Eu Rohs Directive	Pro-active compliance (Product out of EU RoHS legal scope)
China Rohs Regulation	China RoHS declaration
Environmental Disclosure	Product Environmental Profile
Weee	The product must be disposed on European Union markets following specific waste collection and never end up in rubbish bins.
Circularity Profile	End of Life Information
California Proposition 65	WARNING: This product can expose you to chemicals including: Lead and lead compounds, which is known to the State of California to cause cancer and birth defects or other reproductive harm. For more information go to www.P65Warnings.ca.gov

Dimensions Drawings

External Dimensions

Display Unit with Box Module

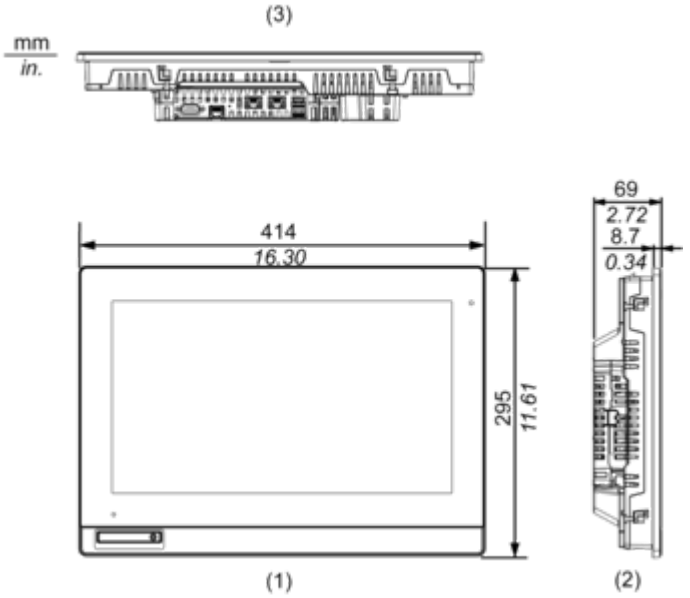

(1) Front
(2) Left
(3) Bottom

Installation with Installation Fasteners and Dimensions with Cables

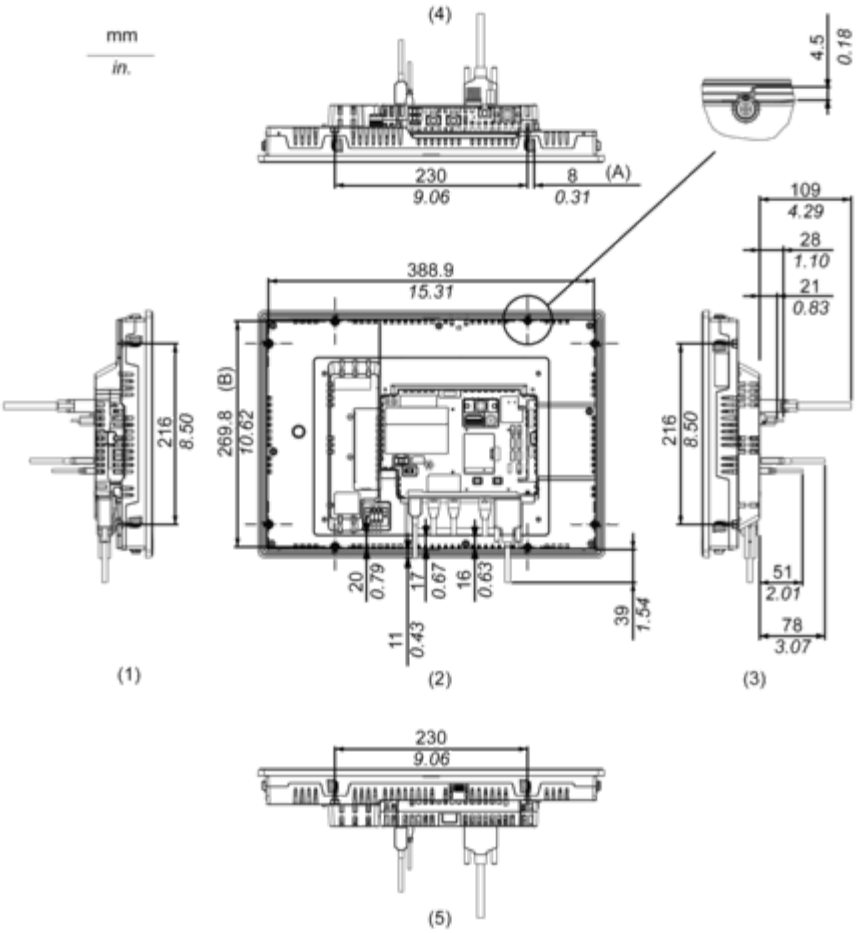

(A) Rotation area of the fastener
(B) Pitch of the center of installation fastner screws
(1) Right
(2) Front
(3) Left
(4) Bottom
(5) Top

Mounting and Clearance

Panel Cut Dimensions

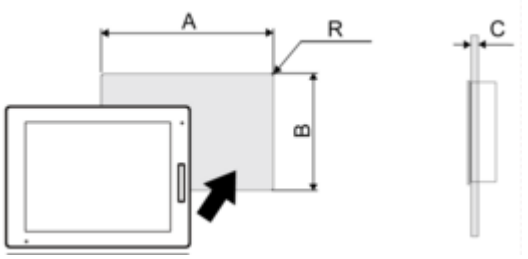

Dimensions in mm

A	B	C	R
396 (+1/-0)	277 (+1/-0)	1.6...5	3 max.

Dimensions in in.

A	B	C	R
15.59 (+0.04/-0)	10.91 (+0.04/-0)	0.06...0.2	0.12 max.

Installation Requirements

Mounting Angle

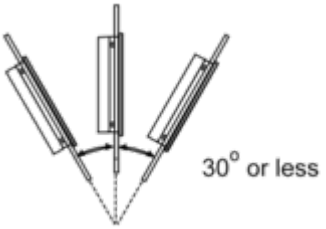

When installing this product in a slanted position with an incline more than 30°, the ambient temperature must not exceed 40 °C (104 °F). You may need to use forced air cooling (fan, A/C) to ensure the ambient operating temperature is 40 °C or less (104 °F or less).
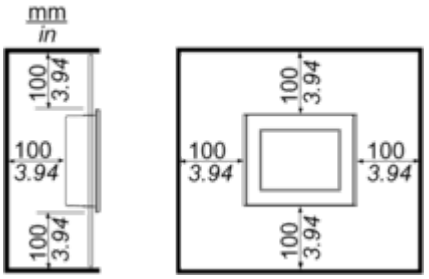
Clearance