Product data sheet

Specifications

Green Premium™

Modular box PC, Harmony iPC, HMIBM Performance HDD DC Windows 10 2 slots

HMIBMPHI74D2801

Discontinued on: Oct 25, 2023

Discontinued

Product availability: Stock - Normally stocked in distribution facility

Main

Range Of Product	Harmony iPC
Product Or Component Type	Modular box PC
Device Short Name	Modular BOX PC Performance
Range Compatibility	Modular Display HMIDM IDisplay
Accessory / Separate Part Destination	PC panel HMIDM modular display
Processor Name	Intel Core i7 4650U 1.7 GHz turbo boost at 3.3 GHz
Chipset Type	Intel QM87
Video Controller Type	Intel HD Graphics 5000
Operating System	Windows 10 IoT Enterprise 64 bit switched from Windows 8.1 in Q1 2018)multi-language
Software Package	Node-RED and system nodes restore IIoT Wiring Operating System Restore McAfee white listing installer cyber security license not included EcoStruxture secure connect advisor annual subscription cyber security license not included EcoStruxure Operator Terminal Expert run time HMI license not included EcoStruxure machine SCADA expert run time HMI/SCADA on configured offer only EcoStruxure augmented operator advisor server augmented operator license not included

Complementary

Mounting Location	Book mounting Wall mounting Flat mounting
Data Storage Equipment	500 GB enterprise hard disk
Memory Description	8 GB RAM DDR3 internal not expandable) 512 KB MRAM internal
Free Slots	2 Internal SATA HDD/SSD with slide-in HMIYMADSDD1 to mount hot swap RAID with Intel Rapid Storage Technology 1 CFast 1 mSATA
Number Of Slots	2 slot(s) for mini PCI Express full-size
Number Of Slots Available For Expansion	2 mini PCIe
Display Resolution	3200 x 2000 pixels at 60 Hz
Watchdog Timer	1…255 ms
Type Of Cooling	Fanless Fan required to mount PCI/PCIe cards above 3 W

Price is “List Price” and may be subject to a trade discount – check with your local distributor or retailer for actual price.

Disclaimer: This documentation is not intended as a substitute for and is not to be used for determining suitability or reliability of these products for specific user applications

Electrical Connection	Screw connector, connector type: pin, 1 way, circuit application: ground - location: bottom Connector, connector type: SMA, 3 ways - location: top
Integrated Connection Type	Display port 1 bottom Display port 1 front Ethernet 2 RJ45 I210 10/100/1000 Mbps bottom IEEE 1588 supported COM1 serial link battery backup 1 male SUB-D 9 RS232/422/485 bottom USB 2.0 port 2 USB type A 480 Mbit/s bottom USB 3.0 port 2 USB type A 5 Gbit/s bottom TPM connector Ver 1.2 cyber security - hardware encryption TPM module HMIYMINATPM201 to be installed/default installed motherboard
[Us] Rated Supply Voltage	24 V DC power supply 100...240 V AC power supply
Supply Voltage Limits	18…36 V
Inrush Current	8.9 A
Power Consumption In W	40.0 W box) 44.0 W with 4:3 12" display HMIDM6421) 43.0 W with Wide 12" display HMIDM6521) 45 W with 4:3 15" display HMIDM7421) 46 W with Wide 15" display HMIDM7521) 48 W with Wide 19" display HMIDM9521) 51 W with Wide 22" display HMIDMA521)
Control Type	ON/OFF button
Main Type	Performance
Depth	2.57 in (65.2 mm)
Height	8.15 in (207 mm)
Width	10.00 in (254 mm)
Net Weight	6.83 lb(US) (3.1 kg)

Environment

Standards	Class A group 1 EN 55011 EN 61000-6-4 EN 61131-2 FCC part 15 UL 61010
Product Certifications	CE CULus CULus CSA 22-2 No 142 CULus HazLoc Class I Division 2 ANSI/ISA 12-12-01 CULus HazLoc Class I Division 2 CSA 22-2 No 213 ATEX CCC RCM Marine GL Bridge EAC IEC Ex hazardous locations 3GD zone 2/22
Quality Labels	CE
Directives	2006/95/EC - low voltage directive 2004/108/EC - electromagnetic compatibility
Ip Degree Of Protection	IP40 IEC 60529
Electromagnetic Compatibility	Immunity to high frequency interference conforming to IEC 61000-4 Disturbing field emission class A conforming to EN 55011 Conducted and radiated emissions class A conforming to EN 55022
Ambient Air Temperature For Storage	-22…158 °F (-30…70 °C) IEC 60068-2-2 -22…158 °F (-30…70 °C) IEC 60068-2-14
Relative Humidity	10…95 % non-condensing EN/IEC 60068-2-30

Ambient Air Temperature For Operation	32…131 °F (0…55 °C) by default) EN/IEC 60068-2-2 32…122 °F (0…50 °C) flat mounting EN/IEC 60068-2-2 32…113 °F (0…45 °C)PCI/PCIe HMIDM modular display with HDD EN/IEC 60068-2-2 32…104 °F (0…40 °C) flat mountingHDD 32…104 °F (0…40 °C) flat mountingmini PCIe 32…104 °F (0…40 °C) flat mountingPCI/PCIe 32…113 °F (0…45 °C) 2mini PCIe HMIDM modular display EN/IEC 60068-2-2
Operating Altitude	6561.68 ft (2000 m) IEC 60664-1
Vibration Resistance	2 gn 5…500 Hz) SSD or CFast 1 gn 5…500 Hz) HDD

Ordering and shipping details

Category	US10MC322575
Discount Schedule	0MC3
Gtin	3606480853555
Returnability	No
Country Of Origin	FR

Packing Units

Unit Type Of Package 1	PCE
Number Of Units In Package 1	1
Package 1 Height	2.56 in (6.5 cm)
Package 1 Width	8.15 in (20.7 cm)
Package 1 Length	10.00 in (25.4 cm)
Package 1 Weight	7.05 lb(US) (3.2 kg)
Unit Type Of Package 2	CAR
Number Of Units In Package 2	1
Package 2 Height	17.72 in (45.0 cm)
Package 2 Width	9.65 in (24.5 cm)
Package 2 Length	16.93 in (43.0 cm)
Package 2 Weight	11.46 lb(US) (5.2 kg)
Unit Type Of Package 3	P12
Number Of Units In Package 3	5
Package 3 Height	24.41 in (62.0 cm)
Package 3 Width	31.50 in (80.0 cm)
Package 3 Length	47.24 in (120.0 cm)
Package 3 Weight	66.14 lb(US) (30.0 kg)

Sustainability

Green Premium™ label is Schneider Electric's commitment to delivering products with best-in-class environmental performance. Green Premium promises compliance with the latest regulations, transparency on environmental impacts, as well as circular and low-CO_2 products.

Guide to assessing product sustainability is a white paper that clarifies global eco-label standards and how to interpret environmental declarations.

Learn more about Green Premium >

Guide to assess a product's sustainability >

Transparency RoHS/REACh

Well-being performance

- Reach Free Of Svhc
- Mercury Free
- Rohs Exemption Information — Yes

Certifications & Standards

Reach Regulation	REACh Declaration
Eu Rohs Directive	Pro-active compliance (Product out of EU RoHS legal scope)
China Rohs Regulation	China RoHS declaration
Environmental Disclosure	Product Environmental Profile
Weee	The product must be disposed on European Union markets following specific waste collection and never end up in rubbish bins.
Circularity Profile	End of Life Information
California Proposition 65	WARNING: This product can expose you to chemicals including: Lead and lead compounds, which is known to the State of California to cause cancer and birth defects or other reproductive harm. For more information go to www.P65Warnings.ca.gov

Dimensions Drawings

Dimensions

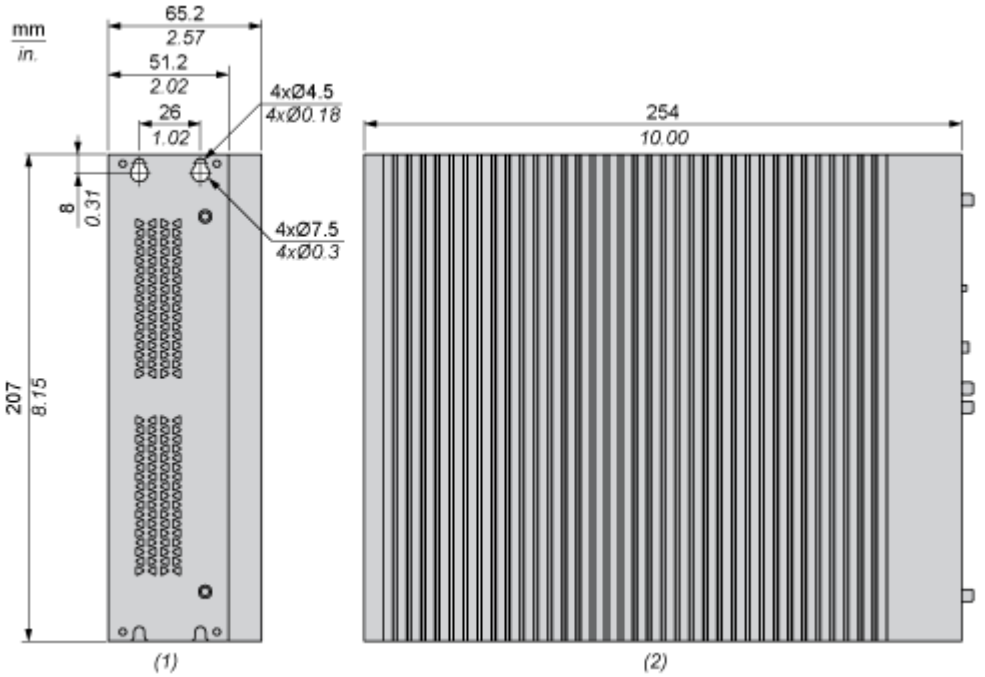

(1) Rear view

(2) Left view

Mounting and Clearance

Spacing Requirements

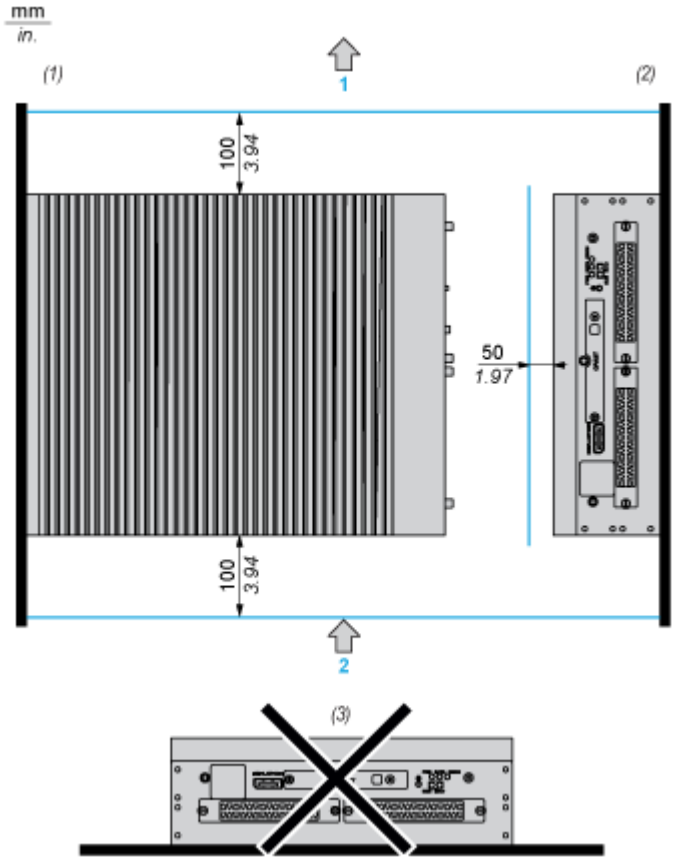

1 : Air out

2 : Air in

(1) Book mounting : Vertical mounting with rear fixing

(2) Wall mounting : Vertical mounting with side fixing

(3) Horizontal mounting