Product data sheet

Specifications

Discontinued

Safety switch, heavy duty, fusible, 30A, 3 pole, 7.5HP, 240VAC, 250VDC, NEMA 4, 4X, 5, 304 steel, neutral

H321NDS

Discontinued on: Jun 23, 2023

Product availability: Non-Stock - Not normally stocked in distribution facility

Main

Product	Single Throw Safety Switch
Duty Rating	Heavy duty
Device Application	Heavy application
Disconnect Type	Fusible disconnect
Factory Installed Neutral	Neutral (factory installed)
Phase	3 phase
Number Of Poles	3
Current Rating	30 A
Voltage Rating	250 V DC 240 V AC
Enclosure Rating	NEMA 4/4X/5 stainless steel 304
Motor Power Hp	1.5 hp at 240 V AC 50-60 Hz for 1 phase motors 3 hp at 240 V AC 50-60 Hz for 3 phase motors 3 hp at 240 V AC 50-60 Hz for 1 phase motors 7.5 hp at 240 V AC 50-60 Hz for 3 phase motors 5 hp at 250 V DC

Complementary

Short-Circuit Current	10 kA for H or K 200 kA for R or J
Fuse Type	H or K R or J
Mounting Type	Surface
Electrical Connection	Lugs
Wiring Configuration	4-wire (3PH + G)
Wire Size	AWG 12...AWG 6 aluminium AWG 14...AWG 6 copper
Tightening Torque	45 lbf.in (5.08 N.m) 0.02 in² (13.3 mm²) (AWG 6) 40 lbf.in (4.52 N.m) 0.01 in² (8.367 mm²) (AWG 8) 35 lbf.in (3.95 N.m) 0.00…0.01 in² (2.06…5.261 mm²) (AWG 14...AWG 10)
Depth	5.11 in (129.79 mm)
Width	7.22 in (183.39 mm)
Height	14.93 in (379.22 mm)

Price is “List Price” and may be subject to a trade discount – check with your local distributor or retailer for actual price.

Disclaimer: This documentation is not intended as a substitute for and is not to be used for determining suitability or reliability of these products for specific user applications

Net Weight	13.23 lb(US) (6 kg)

Environment

Certifications	UL listed file E2875

Ordering and shipping details

Category	US10DE100010
Discount Schedule	0DE1
Gtin	785901694113
Returnability	No
Country Of Origin	US

Packing Units

Unit Type Of Package 1	PCE
Number Of Units In Package 1	1
Package 1 Height	5.70 in (14.478 cm)
Package 1 Width	9.10 in (23.114 cm)
Package 1 Length	17.30 in (43.942 cm)
Package 1 Weight	12.50 lb(US) (5.67 kg)

Contractual warranty

Warranty	18 months

Sustainability

Green Premium™ label is Schneider Electric's commitment to delivering products with best-in-class environmental performance. Green Premium promises compliance with the latest regulations, transparency on environmental impacts, as well as circular and low-CO_2 products.

Guide to assessing product sustainability is a white paper that clarifies global eco-label standards and how to interpret environmental declarations.

Learn more about Green Premium >

Guide to assess a product's sustainability >

Transparency RoHS/REACh

Well-being performance

Mercury Free	
Rohs Exemption Information	Yes
Pvc Free	

Certifications & Standards

Reach Regulation	REACh Declaration
Eu Rohs Directive	Compliant with Exemptions
China Rohs Regulation	China RoHS declaration Product out of China RoHS scope. Substance declaration for your information.
Environmental Disclosure	Product Environmental Profile
Circularity Profile	No need of specific recycling operations
California Proposition 65	WARNING: This product can expose you to chemicals including: Lead and lead compounds, which is known to the State of California to cause cancer and birth defects or other reproductive harm. For more information go to www.P65Warnings.ca.gov

Dimensions Drawings
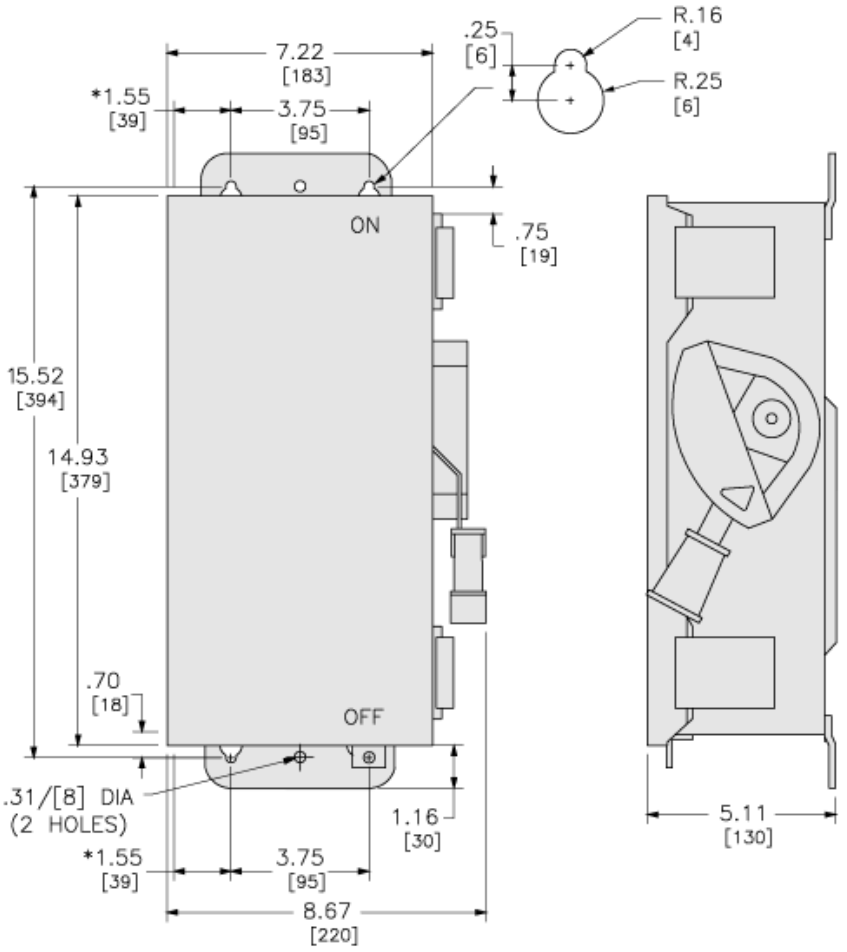
Approximate Dimensions