Product data sheet

Specifications

Green Premium™

AC servo motor BSH, Lexium 32, 27.8N.m, 3000rpm, untapped shaft, with brake, IP50

BSH1403T02F2P

Discontinued on: Jun 30, 2023

Discontinued

Product availability: Non-Stock - Not normally stocked in distribution facility

Main

Product Or Component Type	Servo motor
Device Short Name	BSH
Maximum Mechanical Speed	4800 rpm
Continuous Stall Torque	246.05 lbf.in (27.8 N.m) LXM32.D72N4 24 A, 400 V, three phase 246.05 lbf.in (27.8 N.m) LXM32.D72N4 24 A, 480 V, three phase
Peak Stall Torque	798.34 lbf.in (90.2 N.m) LXM32.D72N4 24 A, 400 V, three phase 798.34 lbf.in (90.2 N.m) LXM32.D72N4 24 A, 480 V, three phase
Nominal Output Power	4100 W LXM32.D72N4 24 A, 400 V, three phase 4100 W LXM32.D72N4 24 A, 480 V, three phase
Nominal Torque	114.17 lbf.in (12.9 N.m) LXM32.D72N4 24 A, 400 V, three phase 114.17 lbf.in (12.9 N.m) LXM32.D72N4 24 A, 480 V, three phase
Nominal Speed	3000 rpm LXM32.D72N4 24 A, 400 V, three phase 3000 rpm LXM32.D72N4 24 A, 480 V, three phase
Product Compatibility	LXM32.D72N4 400 V three phase LXM32.D72N4 480 V three phase
Shaft End	Untapped
Ip Degree Of Protection	IP50 standard
Speed Feedback Resolution	131072 points/turn x 4096 turns
Holding Brake	With
Mounting Support	International standard
Electrical Connection	Rotatable right-angled connectors

Complementary

Range Compatibility	Lexium 32
Supply Voltage Max	480 V
Phase	Three phase
Continuous Stall Current	22.3 A
Maximum Continuous Power	3.3 W
Maximum Current Irms	72 A LXM32.D72N4
Maximum Permanent Current	81.3 A
Switching Frequency	8 kHz
Second Shaft	Without second shaft end

Price is “List Price” and may be subject to a trade discount – check with your local distributor or retailer for actual price.

Disclaimer: This documentation is not intended as a substitute for and is not to be used for determining suitability or reliability of these products for specific user applications

Shaft Diameter	0.94 in (24 mm)
Shaft Length	1.97 in (50 mm)
Feedback Type	Multiturn SinCos Hiperface
Holding Torque	318.63 lbf.in (36 N.m) holding brake
Motor Flange Size	5.51 in (140 mm)
Number Of Motor Stacks	3
Torque Constant	1.58 N.m/A 248 °F (120 °C)
Back Emf Constant	105 V/krpm 248 °F (120 °C)
Number Of Motor Poles	10
Rotor Inertia	14.48 kg.cm²
Stator Resistance	0.4 Ohm 68 °F (20 °C)
Stator Inductance	5.1 mH 68 °F (20 °C)
Stator Electrical Time Constant	12.75 ms 68 °F (20 °C)
Maximum Radial Force Fr	1780 N 3000 rpm 2030 N 2000 rpm 2560 N 1000 rpm
Maximum Axial Force Fa	0.2 x Fr
Brake Pull-In Power	26 W
Type Of Cooling	Natural convection
Length	14.39 in (365.5 mm)
Centring Collar Diameter	5.12 in (130 mm)
Centring Collar Depth	0.14 in (3.5 mm)
Number Of Mounting Holes	4
Mounting Holes Diameter	0.43 in (11 mm)
Circle Diameter Of The Mounting Holes	6.50 in (165 mm)
Net Weight	50.71 lb(US) (23 kg)

Ordering and shipping details

Category	US1PC5318282
Discount Schedule	PC53
Gtin	3606485201351
Returnability	No
Country Of Origin	DE

Packing Units

Unit Type Of Package 1	PCE
Number Of Units In Package 1	1
Package 1 Height	10.63 in (27.0 cm)
Package 1 Width	10.63 in (27.0 cm)
Package 1 Length	18.98 in (48.2 cm)
Package 1 Weight	29.30 lb(US) (13.29 kg)

Contractual warranty

Warranty	18 months

Sustainability

Green Premium™ label is Schneider Electric's commitment to delivering products with best-in-class environmental performance. Green Premium promises compliance with the latest regulations, transparency on environmental impacts, as well as circular and low-CO_2 products.

Guide to assessing product sustainability is a white paper that clarifies global eco-label standards and how to interpret environmental declarations.

Learn more about Green Premium >

Guide to assess a product's sustainability >

Transparency RoHS/REACh

Well-being performance

Mercury Free	
Rohs Exemption Information	Yes
Pvc Free	

Certifications & Standards

Reach Regulation	REACh Declaration
Eu Rohs Directive	Pro-active compliance (Product out of EU RoHS legal scope)
China Rohs Regulation	China RoHS declaration
Environmental Disclosure	Product Environmental Profile
Weee	The product must be disposed on European Union markets following specific waste collection and never end up in rubbish bins.
Circularity Profile	No need of specific recycling operations
California Proposition 65	WARNING: This product can expose you to chemicals including: Lead and lead compounds, which is known to the State of California to cause cancer and birth defects or other reproductive harm. For more information go to www.P65Warnings.ca.gov

Dimensions Drawings

Servo Motors Dimensions

Example with Straight Connectors

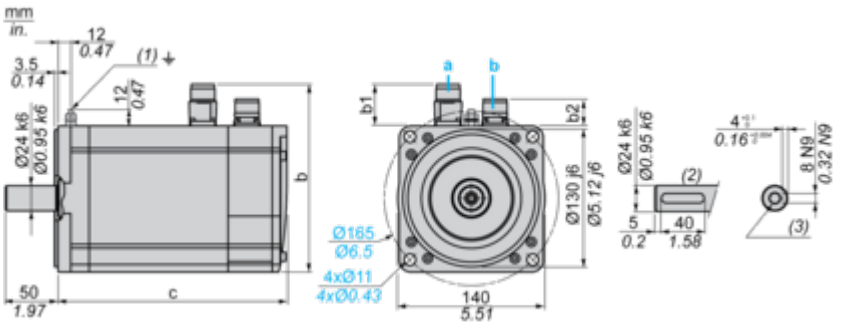

a: Power supply for servo motor brake
b: Power supply for servo motor encoder
(1) M4 screw
(2) Shaft end, keyed slot (optional)
(3) For screws M8 x 19 mm/M8 x 0.75 in.

Dimensions in mm

Straight connectors			Rotatable angled connectors			c (without brake)	c (with brake)
b	b1	b2	b	b1	b2		
192.5	54	25.5	198.5	60	39.5	328	366

Dimensions in in.

Straight connectors			Rotatable angled connectors			c (without brake)	c (with brake)
b	b1	b2	b	b1	b2		
7.57	2.12	1.00	7.81	2.36	1.55	12.91	14.40

Performance Curves

400 V 3-Phase Supply Voltage

Torque/Speed Curves

Servo motor with LXM32•D72N4 servo drive

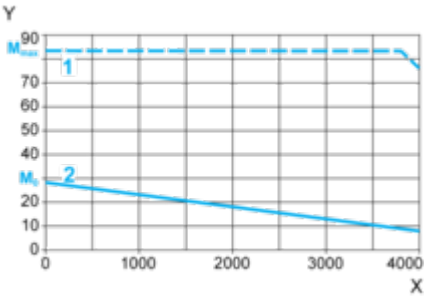

X Speed in rpm
Y Torque in Nm
1 Peak torque
2 Continuous torque

480 V 3-Phase Supply Voltage

Torque/Speed Curves

Servo motor with LXM32•D72N4 servo drive

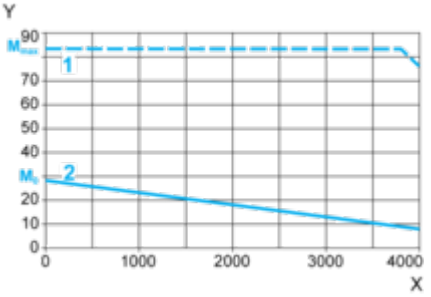

X Speed in rpm
Y Torque in Nm
1 Peak torque
2 Continuous torque