Product data sheet

Specifications

servo motor BSH, Lexium 05, 11.1N.m, 1500rpm, 140mm, keyed shaft, Sincos single turn, without brake, IP65

BSH1401P31A2A

Product availability: Non-Stock - Not normally stocked in distribution facility

Price*: 1,995.00 USD

Main

Product Or Component Type	Servo motor
Device Short Name	BSH
Maximum Mechanical Speed	4000 rpm
Continuous Stall Torque	98.24 lbf.in (11.1 N.m) LXM32.D30N4 10 A, 400 V, three phase 98.24 lbf.in (11.1 N.m) LXM32.D30N4 10 A, 480 V, three phase 98.24 lbf.in (11.1 N.m) LXM15MD28N4, 400 V, three phase 98.24 lbf.in (11.1 N.m) LXM15MD28N4, 480 V, three phase 98.24 lbf.in (11.1 N.m) LXM15MD28N4, 230 V, three phase 98.24 lbf.in (11.1 N.m) LXM15MD40N4, 400 V, three phase 98.24 lbf.in (11.1 N.m) LXM15MD40N4, 480 V, three phase 98.24 lbf.in (11.1 N.m) LXM15LD28M3, 230 V, three phase 100.90 lbf.in (11.4 N.m) LXM05AD34N4, 380...480 V, three phase 100.90 lbf.in (11.4 N.m) LXM05BD34N4, 380...480 V, three phase 100.90 lbf.in (11.4 N.m) LXM05CD34N4, 380...480 V, three phase
Peak Stall Torque	238.97 lbf.in (27 N.m) LXM32.D30N4 10 A, 400 V, three phase 238.97 lbf.in (27 N.m) LXM32.D30N4 10 A, 480 V, three phase 206.49 lbf.in (23.33 N.m) LXM15MD28N4, 230 V, three phase 206.49 lbf.in (23.33 N.m) LXM15MD28N4, 400 V, three phase 206.49 lbf.in (23.33 N.m) LXM15MD28N4, 480 V, three phase 206.49 lbf.in (23.33 N.m) LXM15MD40N4, 400 V, three phase 206.49 lbf.in (23.33 N.m) LXM15MD40N4, 480 V, three phase 210.65 lbf.in (23.8 N.m) LXM15LD28M3, 230 V, three phase 206.49 lbf.in (23.33 N.m) LXM05AD34N4, 380...480 V, three phase 206.49 lbf.in (23.33 N.m) LXM05BD34N4, 380...480 V, three phase 206.49 lbf.in (23.33 N.m) LXM05CD34N4, 380...480 V, three phase
Nominal Output Power	2500 W LXM32.D30N4 10 A, 400 V, three phase 3000 W LXM32.D30N4 10 A, 480 V, three phase 2000 W LXM15MD28N4, 400 V, three phase 2000 W LXM15MD40N4, 400 V, three phase 2200 W LXM05AD34N4, 380...480 V, three phase 2200 W LXM05BD34N4, 380...480 V, three phase 2200 W LXM05CD34N4, 380...480 V, three phase 1400 W LXM15LD28M3, 230 V, three phase 1400 W LXM15MD28N4, 230 V, three phase 2150 W LXM15MD28N4, 480 V, three phase 2150 W LXM15MD40N4, 480 V, three phase
Nominal Torque	84.08 lbf.in (9.5 N.m) LXM32.D30N4 10 A, 400 V, three phase 84.08 lbf.in (9.5 N.m) LXM32.D30N4 10 A, 480 V, three phase 60.18 lbf.in (6.8 N.m) LXM15MD28N4, 480 V, three phase 60.18 lbf.in (6.8 N.m) LXM15MD40N4, 480 V, three phase 61.07 lbf.in (6.9 N.m) LXM05AD34N4, 380...480 V, three phase 61.07 lbf.in (6.9 N.m) LXM05BD34N4, 380...480 V, three phase 61.07 lbf.in (6.9 N.m) LXM05CD34N4, 380...480 V, three phase 67.53 lbf.in (7.63 N.m) LXM15MD28N4, 400 V, three phase 67.53 lbf.in (7.63 N.m) LXM15MD40N4, 400 V, three phase 80.54 lbf.in (9.1 N.m) LXM15LD28M3, 230 V, three phase 80.54 lbf.in (9.1 N.m) LXM15MD28N4, 230 V, three phase

Price is “List Price” and may be subject to a trade discount – check with your local distributor or retailer for actual price.

Disclaimer: This documentation is not intended as a substitute for and is not to be used for determining suitability or reliability of these products for specific user applications

Nominal Speed	2500 rpm LXM32.D30N4 10 A, 400 V, three phase 3000 rpm LXM32.D30N4 10 A, 480 V, three phase 3000 rpm LXM05AD34N4, 380...480 V, three phase 3000 rpm LXM05BD34N4, 380...480 V, three phase 3000 rpm LXM05CD34N4, 380...480 V, three phase 1500 rpm LXM15MD28N4, 230 V, three phase 1500 rpm LXM15LD28M3, 230 V, three phase 2500 rpm LXM15MD28N4, 400 V, three phase 2500 rpm LXM15MD40N4, 400 V, three phase 3000 rpm LXM15MD28N4, 480 V, three phase 3000 rpm LXM15MD40N4, 480 V, three phase
Product Compatibility	LXM15LD28M3 230 V three phase LXM05AD34N4 380...480 V three phase LXM05BD34N4 380...480 V three phase LXM05CD34N4 380...480 V three phase LXM15MD28N4 400 V three phase LXM15MD28N4 480 V three phase LXM15MD40N4 400 V three phase LXM15MD40N4 480 V three phase LXM15MD28N4 230 V three phase
Shaft End	Keyed
Ip Degree Of Protection	IP65 standard IP67 with IP67 kit
Speed Feedback Resolution	131072 points/turn
Holding Brake	Without
Mounting Support	International standard flange
Electrical Connection	Rotatable right-angled connectors

Complementary

Range Compatibility	Lexium 32 Lexium 05 Lexium 15
Supply Voltage Max	480 V
Phase	Three phase
Continuous Stall Current	7.8 A
Maximum Continuous Power	3.6 W
Maximum Current Irms	20.8 A LXM15LD28M3 20.8 A LXM15MD28N4 20.8 A LXM15MD40N4 20.8 A LXM05AD34N4 20.8 A LXM05BD34N4 20.8 A LXM05CD34N4 20.8 A LXM32.D30N4
Maximum Permanent Current	20.8 A
Switching Frequency	8 kHz
Second Shaft	Without second shaft end
Shaft Diameter	0.94 in (24 mm)
Shaft Length	1.97 in (50 mm)
Key Width	1.57 in (40 mm)
Feedback Type	Single turn SinCos Hiperface
Motor Flange Size	5.51 in (140 mm)
Number Of Motor Stacks	1
Torque Constant	1.43 N.m/A 248 °F (120 °C)
Back Emf Constant	100 V/krpm 248 °F (120 °C)

Number Of Motor Poles	10
Rotor Inertia	7.41 kg.cm²
Stator Resistance	1.41 Ohm 68 °F (20 °C)
Stator Inductance	15.6 mH 68 °F (20 °C)
Stator Electrical Time Constant	11.06 ms 68 °F (20 °C)
Maximum Radial Force Fr	1530 N 3000 rpm 1760 N 2000 rpm 2210 N 1000 rpm
Maximum Axial Force Fa	0.2 x Fr
Type Of Cooling	Natural convection
Length	8.56 in (217.5 mm)
Centring Collar Diameter	5.12 in (130 mm)
Centring Collar Depth	0.14 in (3.5 mm)
Number Of Mounting Holes	4
Mounting Holes Diameter	0.43 in (11 mm)
Circle Diameter Of The Mounting Holes	6.50 in (165 mm)
Net Weight	26.24 lb(US) (11.9 kg)

Ordering and shipping details

Category	US1PC5318282
Discount Schedule	PC53
Gtin	3389118140936
Returnability	No
Country Of Origin	US

Packing Units

Unit Type Of Package 1	PCE
Number Of Units In Package 1	1
Package 1 Height	10.63 in (27.0 cm)
Package 1 Width	10.63 in (27.0 cm)
Package 1 Length	18.98 in (48.2 cm)
Package 1 Weight	17.64 lb(US) (8.0 kg)

Contractual warranty

Warranty	18 months

Sustainability

Green Premium™ label is Schneider Electric's commitment to delivering products with best-in-class environmental performance. Green Premium promises compliance with the latest regulations, transparency on environmental impacts, as well as circular and low-CO_2 products.

Guide to assessing product sustainability is a white paper that clarifies global eco-label standards and how to interpret environmental declarations.

Learn more about Green Premium >

Guide to assess a product's sustainability >

Transparency RoHS/REACh

Well-being performance

Mercury Free	
Rohs Exemption Information	Yes
Pvc Free	

Certifications & Standards

Reach Regulation	REACh Declaration
Eu Rohs Directive	Pro-active compliance (Product out of EU RoHS legal scope)
China Rohs Regulation	China RoHS declaration
Environmental Disclosure	Product Environmental Profile
Weee	The product must be disposed on European Union markets following specific waste collection and never end up in rubbish bins.
Circularity Profile	No need of specific recycling operations
California Proposition 65	WARNING: This product can expose you to chemicals including: Lead and lead compounds, which is known to the State of California to cause cancer and birth defects or other reproductive harm. For more information go to www.P65Warnings.ca.gov

Dimensions Drawings

Servo Motors Dimensions

Example with Straight Connectors

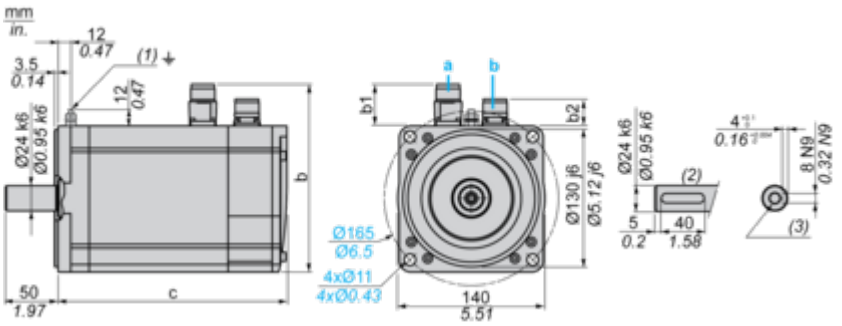

a: Power supply for servo motor brake
b: Power supply for servo motor encoder
(1) M4 screw
(2) Shaft end, keyed slot (optional)
(3) For screws M8 x 19 mm/M8 x 0.75 in.

Dimensions in mm

Straight connectors			Rotatable angled connectors			c (without brake)	c (with brake)
b	b1	b2	b	b1	b2		
178	39.5	25.5	178	39.5	39.5	218	256

Dimensions in in.

Straight connectors			Rotatable angled connectors			c (without brake)	c (with brake)
b	b1	b2	b	b1	b2		
7.00	1.55	1.00	7.00	1.55	1.55	8.58	10.07

Performance Curves

400 V 3-Phase Supply Voltage

Torque/Speed Curves

Servo motor with LXM32•D30N4 servo drive

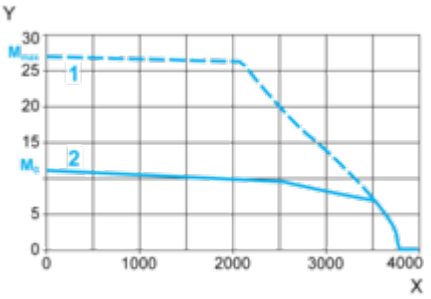

X Speed in rpm
Y Torque in Nm
1 Peak torque
2 Continuous torque

480 V 3-Phase Supply Voltage

Torque/Speed Curves

Servo motor with LXM32•D30N4 servo drive

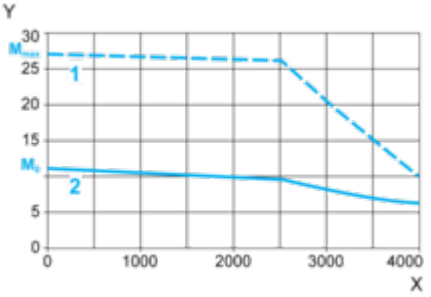

X Speed in rpm
Y Torque in Nm
1 Peak torque
2 Continuous torque