Product data sheet

Specifications

Green Premium™

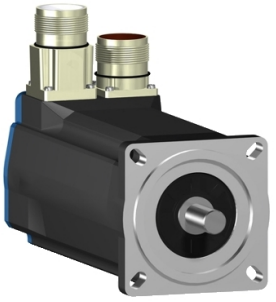

AC servo motor BSH, Lexium 05, 2.12N.m, 6000rpm, keyed shaft, without brake, IP65

BSH0702T32A1A

Discontinued on: Oct 9, 2023

Discontinued

Product availability: Non-Stock - Not normally stocked in distribution facility

Main

Product Or Component Type	Servo motor
Device Short Name	BSH
Maximum Mechanical Speed	8000 rpm
Continuous Stall Torque	19.47 lbf.in (2.2 N.m) LXM32.D30M2 10 A, 115 V, single phase 18.76 lbf.in (2.12 N.m) LXM05AD17M2, 200...240 V, single phase 18.76 lbf.in (2.12 N.m) LXM05BD17M2, 200...240 V, single phase 18.76 lbf.in (2.12 N.m) LXM05CD17M2, 200...240 V, single phase 19.47 lbf.in (2.2 N.m) LXM32.D18M2 6 A, 230 V, single phase 18.76 lbf.in (2.12 N.m) LXM05AD17F1, 110...120 V, single phase 18.76 lbf.in (2.12 N.m) LXM05AD28M2, 200...240 V, single phase 18.76 lbf.in (2.12 N.m) LXM05BD17F1, 110...120 V, single phase 18.76 lbf.in (2.12 N.m) LXM05BD28M2, 200...240 V, single phase 18.76 lbf.in (2.12 N.m) LXM05CD17F1, 110...120 V, single phase 18.76 lbf.in (2.12 N.m) LXM05CD28M2, 200...240 V, single phase 18.76 lbf.in (2.12 N.m) LXM15LD17N4, 230 V, three phase 18.76 lbf.in (2.12 N.m) LXM15LD21M3, 230 V, three phase 18.76 lbf.in (2.12 N.m) LXM05AD42M3X, 200...240 V, three phase 18.76 lbf.in (2.12 N.m) LXM05BD42M3X, 200...240 V, three phase 18.76 lbf.in (2.12 N.m) LXM05CD42M3X, 200...240 V, three phase
Peak Stall Torque	53.99 lbf.in (6.1 N.m) LXM32.D30M2 10 A, 115 V, single phase 63.73 lbf.in (7.2 N.m) LXM32.D18M2 6 A, 230 V, single phase 36.64 lbf.in (4.14 N.m) LXM05AD17F1, 110...120 V, single phase 36.64 lbf.in (4.14 N.m) LXM05AD17M2, 200...240 V, single phase 36.64 lbf.in (4.14 N.m) LXM05BD17F1, 110...120 V, single phase 36.64 lbf.in (4.14 N.m) LXM05BD17M2, 200...240 V, single phase 36.64 lbf.in (4.14 N.m) LXM05CD17F1, 110...120 V, single phase 36.64 lbf.in (4.14 N.m) LXM05CD17M2, 200...240 V, single phase 60.18 lbf.in (6.8 N.m) LXM05AD28M2, 200...240 V, single phase 60.18 lbf.in (6.8 N.m) LXM05BD28M2, 200...240 V, single phase 60.18 lbf.in (6.8 N.m) LXM05CD28M2, 200...240 V, single phase 39.56 lbf.in (4.47 N.m) LXM15LD17N4, 230 V, three phase 48.24 lbf.in (5.45 N.m) LXM15LD21M3, 230 V, three phase 60.18 lbf.in (6.8 N.m) LXM05AD42M3X, 200...240 V, three phase 60.18 lbf.in (6.8 N.m) LXM05BD42M3X, 200...240 V, three phase 60.18 lbf.in (6.8 N.m) LXM05CD42M3X, 200...240 V, three phase
Nominal Output Power	550 W LXM32.D30M2 10 A, 115 V, single phase 600 W LXM05AD17M2, 200...240 V, single phase 600 W LXM05BD17M2, 200...240 V, single phase 600 W LXM05CD17M2, 200...240 V, single phase 570 W LXM05AD17F1, 110...120 V, single phase 570 W LXM05BD17F1, 110...120 V, single phase 570 W LXM05CD17F1, 110...120 V, single phase 600 W LXM05AD28M2, 200...240 V, single phase 600 W LXM05BD28M2, 200...240 V, single phase 600 W LXM05CD28M2, 200...240 V, single phase 950 W LXM32.D18M2 6 A, 230 V, single phase 1000 W LXM15LD17N4, 230 V, three phase 1000 W LXM15LD21M3, 230 V, three phase 600 W LXM05AD42M3X, 200...240 V, three phase 600 W LXM05BD42M3X, 200...240 V, three phase 600 W LXM05CD42M3X, 200...240 V, three phase

Price is “List Price” and may be subject to a trade discount – check with your local distributor or retailer for actual price.

Disclaimer: This documentation is not intended as a substitute for and is not to be used for determining suitability or reliability of these products for specific user applications

Nominal Torque	18.32 lbf.in (2.07 N.m) LXM32.D30M2 10 A, 115 V, single phase 16.82 lbf.in (1.9 N.m) LXM05AD17M2, 200...240 V, single phase 16.82 lbf.in (1.9 N.m) LXM05BD17M2, 200...240 V, single phase 16.82 lbf.in (1.9 N.m) LXM05CD17M2, 200...240 V, single phase 16.20 lbf.in (1.83 N.m) LXM05AD17F1, 110...120 V, single phase 16.20 lbf.in (1.83 N.m) LXM05BD17F1, 110...120 V, single phase 16.20 lbf.in (1.83 N.m) LXM05CD17F1, 110...120 V, single phase 16.82 lbf.in (1.9 N.m) LXM05AD28M2, 200...240 V, single phase 16.82 lbf.in (1.9 N.m) LXM05BD28M2, 200...240 V, single phase 16.82 lbf.in (1.9 N.m) LXM05CD28M2, 200...240 V, single phase 15.93 lbf.in (1.8 N.m) LXM32.D18M2 6 A, 230 V, single phase 14.69 lbf.in (1.66 N.m) LXM15LD17N4, 230 V, three phase 14.69 lbf.in (1.66 N.m) LXM15LD21M3, 230 V, three phase 16.82 lbf.in (1.9 N.m) LXM05AD42M3X, 200...240 V, three phase 16.82 lbf.in (1.9 N.m) LXM05BD42M3X, 200...240 V, three phase 16.82 lbf.in (1.9 N.m) LXM05CD42M3X, 200...240 V, three phase
Nominal Speed	2500 rpm LXM32.D30M2 10 A, 115 V, single phase 3000 rpm LXM05AD17F1, 110...120 V, single phase 3000 rpm LXM05BD17F1, 110...120 V, single phase 3000 rpm LXM05CD17F1, 110...120 V, single phase 3000 rpm LXM05AD17M2, 200...240 V, single phase 3000 rpm LXM05BD17M2, 200...240 V, single phase 3000 rpm LXM05CD17M2, 200...240 V, single phase 3000 rpm LXM05AD28M2, 200...240 V, single phase 3000 rpm LXM05BD28M2, 200...240 V, single phase 3000 rpm LXM05CD28M2, 200...240 V, single phase 5000 rpm LXM32.D18M2 6 A, 230 V, single phase 3000 rpm LXM05AD42M3X, 200...240 V, three phase 3000 rpm LXM05BD42M3X, 200...240 V, three phase 3000 rpm LXM05CD42M3X, 200...240 V, three phase 6000 rpm LXM15LD17N4, 230 V, three phase 6000 rpm LXM15LD21M3, 230 V, three phase
Product Compatibility	LXM05AD17F1 110...120 V single phase LXM05AD17M2 200...240 V single phase LXM05AD28M2 200...240 V single phase LXM05BD17F1 110...120 V single phase LXM05BD17M2 200...240 V single phase LXM05BD28M2 200...240 V single phase LXM05CD17F1 110...120 V single phase LXM05CD17M2 200...240 V single phase LXM05CD28M2 200...240 V single phase LXM32.D30M2 115 V single phase LXM32.D18M2 230 V single phase LXM15LD21M3 230 V three phase LXM05AD42M3X 200...240 V three phase LXM05BD42M3X 200...240 V three phase LXM05CD42M3X 200...240 V three phase LXM15LD17N4 230 V three phase
Shaft End	Keyed
Ip Degree Of Protection	IP65 standard IP67 with IP67 kit
Speed Feedback Resolution	131072 points/turn x 4096 turns
Holding Brake	Without
Mounting Support	International standard flange
Electrical Connection	Straight connectors

Complementary

Range Compatibility	Lexium 05 Lexium 15 Lexium 32
Supply Voltage Max	480 V
Phase	Three phase
Continuous Stall Current	4.9 A
Maximum Continuous Power	1.51 W

Maximum Current Irms	20.6 A LXM15LD21M3 20.6 A LXM15LD17N4 19.9 A LXM05AD17F1 19.9 A LXM05AD17M2 19.9 A LXM05AD28M2 19.9 A LXM05AD42M3X 19.9 A LXM05BD17F1 19.9 A LXM05BD17M2 19.9 A LXM05BD28M2 19.9 A LXM05BD42M3X 19.9 A LXM05CD17F1 19.9 A LXM05CD17M2 19.9 A LXM05CD28M2 19.9 A LXM05CD42M3X 15 A LXM32.D30M2 18 A LXM32.D18M2
Maximum Permanent Current	19.9 A
Switching Frequency	8 kHz
Second Shaft	Without second shaft end
Shaft Diameter	0.43 in (11 mm)
Shaft Length	0.91 in (23 mm)
Key Width	0.71 in (18 mm)
Feedback Type	Multiturn SinCos Hiperface
Motor Flange Size	2.76 in (70 mm)
Number Of Motor Stacks	2
Torque Constant	0.45 N.m/A 248 °F (120 °C)
Back Emf Constant	28 V/krpm 248 °F (120 °C)
Number Of Motor Poles	6
Rotor Inertia	0.41 kg.cm²
Stator Resistance	1.5 Ohm 68 °F (20 °C)
Stator Inductance	6.7 mH 68 °F (20 °C)
Stator Electrical Time Constant	4.47 ms 68 °F (20 °C)
Maximum Radial Force Fr	390 N 6000 rpm 410 N 5000 rpm 450 N 4000 rpm 490 N 3000 rpm 560 N 2000 rpm 710 N 1000 rpm
Maximum Axial Force Fa	0.2 x Fr
Type Of Cooling	Natural convection
Length	7.36 in (187 mm)
Centring Collar Diameter	2.36 in (60 mm)
Centring Collar Depth	0.10 in (2.5 mm)
Number Of Mounting Holes	4
Mounting Holes Diameter	0.22 in (5.5 mm)
Circle Diameter Of The Mounting Holes	3.23 in (82 mm)
Net Weight	6.37 lb(US) (2.89 kg)

Ordering and shipping details

Category	US1PC5318282

Discount Schedule	PC53
Gtin	3389118136762
Returnability	No
Country Of Origin	DE

Packing Units

Unit Type Of Package 1	PCE
Number Of Units In Package 1	1
Package 1 Height	4.84 in (12.3 cm)
Package 1 Width	5.04 in (12.8 cm)
Package 1 Length	14.84 in (37.7 cm)
Package 1 Weight	6.17 lb(US) (2.8 kg)

Contractual warranty

Warranty	18 months

Sustainability

Green Premium™ label is Schneider Electric's commitment to delivering products with best-in-class environmental performance. Green Premium promises compliance with the latest regulations, transparency on environmental impacts, as well as circular and low-CO_2 products.

Guide to assessing product sustainability is a white paper that clarifies global eco-label standards and how to interpret environmental declarations.

Learn more about Green Premium >

Guide to assess a product's sustainability >

Transparency RoHS/REACh

Well-being performance

Mercury Free

Rohs Exemption Information	Yes

Certifications & Standards

Reach Regulation	REACh Declaration
Eu Rohs Directive	Pro-active compliance (Product out of EU RoHS legal scope)
China Rohs Regulation	China RoHS declaration
Environmental Disclosure	Product Environmental Profile
Weee	The product must be disposed on European Union markets following specific waste collection and never end up in rubbish bins.
Circularity Profile	No need of specific recycling operations
California Proposition 65	WARNING: This product can expose you to chemicals including: Lead and lead compounds, which is known to the State of California to cause cancer and birth defects or other reproductive harm. For more information go to www.P65Warnings.ca.gov

Dimensions Drawings

Servo Motors Dimensions

Example with Straight Connectors

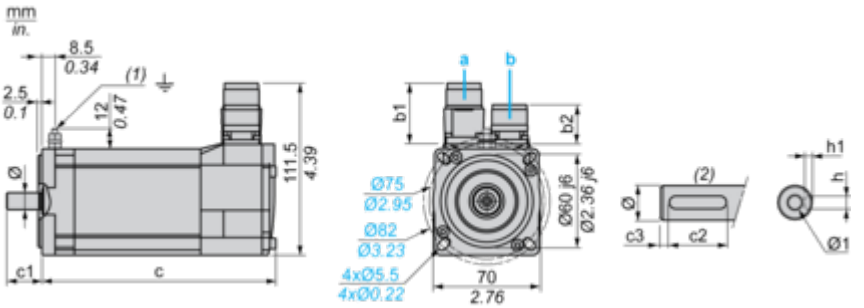

a: Power supply for servo motor brake
b: Power supply for servo motor encoder
(1) M4 screw
(2) Shaft end, keyed slot (optional)

Dimensions in mm

Straight connectors		Rotatable angled connectors		c (without brake)	c (with brake)	c1	c2	c3	h	h1	Ø	Ø1 for screws
b1	b2	b1	b2									
39.5	25.5	39.5	39.5	187	213	23	18	2.5	4 N9	$2.5^{+0.1}_{0}$	11 k6	M4 x 10

Dimensions in in.

Straight connectors		Rotatable angled connectors		c (without brake)	c (with brake)	c1	c2	c3	h	h1	Ø	Ø1 for screws
b1	b2	b1	b2									
1.55	1.00	1.55	1.55	7.36	8.38	0.90	0.70	0.09	0.16 N9	$0.01^{+0.004}_{0}$	0.43 k6	M4 x 0.39

Performance Curves

115 V Single-Phase Supply Voltage

Torque/Speed Curves

Servo motor with LXM32•D30M2 servo drive

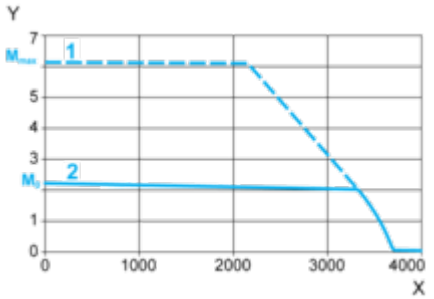

X Speed in rpm
Y Torque in Nm
1 Peak torque
2 Continuous torque

230 V Single-Phase Supply Voltage

Torque/Speed Curves

Servo motor with LXM32•D18M2 servo drive

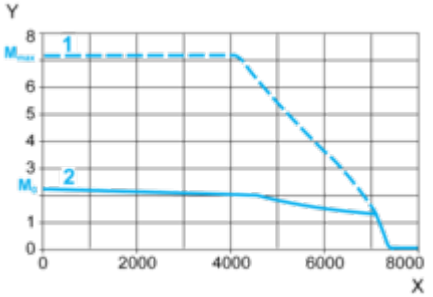

X Speed in rpm
Y Torque in Nm
1 Peak torque
2 Continuous torque