Product data sheet

Specifications

processor module M340, max 1024 discrete and 256 analog I/O, Modbus, Ethernet

BMXP342020

Product availability: Stock - Normally stocked in distribution facility

Main

Range Of Product	Modicon M340 automation platform
Product Or Component Type	Processor module
Concept	Transparent Ready CANopen
Number Of Racks	4
Number Of Slots	11
Discrete I/O Processor Capacity	1024 I/O multi-rack configuration 704 I/O single-rack configuration
Analogue I/O Processor Capacity	256 I/O multi-rack configuration 66 I/O single-rack configuration
Number Of Application Specific Channel	36
Monitoring	Diagnostic counters Modbus Event counters Modbus

Complementary

Control Channels	Programmable loops
Integrated Connection Type	Non isolated serial link RJ45 character mode asynchronous in baseband, RS232C 2 twisted shielded pairs 0.3...19.2 kbit/s full duplex Non isolated serial link RJ45 character mode asynchronous in baseband, RS485 1 twisted shielded pair 0.3...19.2 kbit/s half duplex Non isolated serial link RJ45, master/slave Modbus, RTU/ASCII asynchronous in baseband, RS232C 1 twisted shielded pair 0.3...19.2 kbit/s half duplex Non isolated serial link RJ45, master/slave Modbus, RTU/ASCII asynchronous in baseband, RS485 1 twisted shielded pair 0.3...19.2 kbit/s half duplex USB port 12 Mbit/s Ethernet TCP/IP RJ45 1 twisted pair 10/100 Mbit/s
Communication Module Processor Capacity	2 Ethernet communication module 4 AS-Interface module
Embedded Communication Service	Bandwidth management, Ethernet TCP/IP Data Editor, Ethernet TCP/IP Modbus TCP messaging, Ethernet TCP/IP Rack Viewer, Ethernet TCP/IP SNMP network administrator, Ethernet TCP/IP
Port Ethernet	10BASE-T/100BASE-TX
Number Of Devices Per Segment	0…32character mode) 0…32Modbus)
Number Of Devices	2 point-to-point character mode 2 point-to-point Modbus

Price is “List Price” and may be subject to a trade discount – check with your local distributor or retailer for actual price.

Disclaimer: This documentation is not intended as a substitute for and is not to be used for determining suitability or reliability of these products for specific user applications

Bus Length	0.00…32.81 ft (0…10 m) serial link non isolated character mode segment 0.00…32.81 ft (0…10 m) serial link non isolated Modbus segment 0.00…3280.84 ft (0…1000 m) serial link isolated character mode segment 0.00…3280.84 ft (0…1000 m) serial link isolated Modbus segment 0.00…49.21 ft (0…15 m) character mode point-to-point 0.00…49.21 ft (0…15 m) Modbus point-to-point
Maximum Tap Links Length	<49.21 ft (15 m) serial link non isolated character mode segment <49.21 ft (15 m) serial link non isolated Modbus segment <131.23 ft (40 m) serial link isolated character mode segment <131.23 ft (40 m) serial link isolated Modbus segment
Number Of Addresses	0…248 character mode 0…248 Modbus
Requests	1 K data bytes per request character mode 252 data bytes per RTU request Modbus 504 data bytes per ASCII request Modbus
Control Parameter	One CRC on each frame (RTU) Modbus One LRC on each frame (ASCII) character mode One LRC on each frame (ASCII) Modbus
Memory Description	Supplied memory card (BMXRMS008MP) backup of programs, constants, symbols and data Internal RAM 4096 kB Internal RAM 256 kB data Internal RAM 3584 kB program constants and symbols Supplied memory card (BMXRMS008MP) activation of standard web server, class B10
Maximum Size Of Object Areas	256 kB unlocated internal data 32634 %Mi located internal bits
Default Size Of Object Areas	1024 %MWi internal words located internal data 256 %KWi constant words located internal data 512 %Mi located internal bits
Application Structure	1 cyclic/periodic master task 1 periodic fast task No auxiliary task 64 event tasks
Execution Time Per Instruction	0.12 µs Boolean 0.17 µs double-length words 0.25 µs single-length words 1.16 µs floating points
Number Of Instructions Per Ms	6.4 Kinst/ms 65 % Boolean + 35 % fixed arithmetic 8.1 Kinst/ms 100 % Boolean
System Overhead	0.13 ms fast task 0.7 ms master task
Current Consumption	95 mA 24 V DC
Supply	Internal power supply via rack
Marking	CE
Status Led	1 LED (Green) activity on Ethernet network (ETH ACT) 1 LED (Green) processor running (RUN) 1 LED (Green) status of Ethernet network (ETH STS) 1 LED (Red) data rate (ETH 100) 1 LED (Red) I/O module fault (I/O) 1 LED (Red) memory card fault (CARD ERR) 1 LED (Red) processor or system fault (ERR) 1 LED (Yellow) activity on Modbus (SER COM)
Net Weight	0.45 lb(US) (0.205 kg)

Environment

Ambient Air Temperature For Operation	32…140 °F (0…60 °C)
Relative Humidity	10…95 % without condensation
Ip Degree Of Protection	IP20

Protective Treatment	TC
Directives	2014/35/EU - low voltage directive 2014/30/EU - electromagnetic compatibility
Product Certifications	CE UL CSA RCM EAC Merchant Navy
Standards	EN 61131-2 EN/IEC 61010-2-201 UL 61010-2-201 CSA C22.2 No 61010-2-201 IACS E10 EN/IEC 61000-6-5, interface type 1 and type 2 EN/IEC 61850-3, location G
Environmental Characteristic	Hazardous location class I division 2

Ordering and shipping details

Category	US1PC3418160
Discount Schedule	PC34
Gtin	3595863910711
Returnability	Yes
Country Of Origin	FR

Packing Units

Unit Type Of Package 1	PCE
Number Of Units In Package 1	1
Package 1 Height	2.17 in (5.500 cm)
Package 1 Width	4.33 in (11.000 cm)
Package 1 Length	4.53 in (11.500 cm)
Package 1 Weight	8.68 oz (246.000 g)
Unit Type Of Package 2	S02
Number Of Units In Package 2	15
Package 2 Height	5.91 in (15.000 cm)
Package 2 Width	11.81 in (30.000 cm)
Package 2 Length	15.75 in (40.000 cm)
Package 2 Weight	8.89 lb(US) (4.033 kg)

Contractual warranty

Warranty	18 months

Sustainability

Green Premium™ label is Schneider Electric's commitment to delivering products with best-in-class environmental performance. Green Premium promises compliance with the latest regulations, transparency on environmental impacts, as well as circular and low-CO_2 products.

Guide to assessing product sustainability is a white paper that clarifies global eco-label standards and how to interpret environmental declarations.

Learn more about Green Premium >

Guide to assess a product's sustainability >

Transparency RoHS/REACh

Well-being performance

Mercury Free

Rohs Exemption Information	Yes

Certifications & Standards

Reach Regulation	REACh Declaration
Eu Rohs Directive	Pro-active compliance (Product out of EU RoHS legal scope)
China Rohs Regulation	China RoHS declaration
Environmental Disclosure	Product Environmental Profile
Weee	The product must be disposed on European Union markets following specific waste collection and never end up in rubbish bins.
Circularity Profile	End of Life Information
California Proposition 65	WARNING: This product can expose you to chemicals including: Lead and lead compounds, which is known to the State of California to cause cancer and birth defects or other reproductive harm. For more information go to www.P65Warnings.ca.gov

Dimensions Drawings

Modules Mounted on Racks

Dimensions

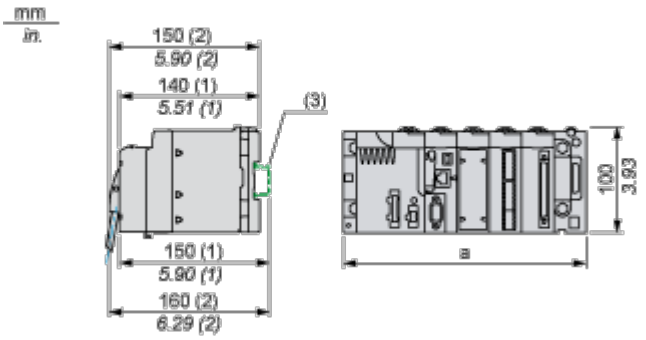

(1) With removable terminal block (cage, screw or spring).

(2) With FCN connector.

(3) On AM1 ED rail: 35 mm wide, 15 mm deep. Only possible with BMXXBP0400/0400H/0600/0600H/0800/0800H rack.

Rack references	a in mm	a in in.
BMXXBP0400 and BMXXBP0400H	242.4	09.54
BMXXBP0600 and BMXXBP0600H	307.6	12.11
BMXXBP0800 and BMXXBP0800H	372.8	14.68
BMXXBP1200 and BMXXBP1200H	503.2	19.81