Product data sheet

Specifications

network module, Modicon M340, EtherNet/IP and Modbus/TCP, 4 x RJ45

BMXNOC0401

Product availability: Stock - Normally stocked in distribution facility

Main

Range Of Product	Modicon M340 automation platform
Product Or Component Type	Ethernet TCP/IP network module
Concept	Transparent Ready
Integrated Connection Type	Ethernet RJ45 10/100 Mbit/s 4 twisted pairs transparent ready class B30
Protective Treatment	TC

Complementary

Communication Service	Bandwidth management Data Editor (via PC terminal) FDR server Rack Viewer SNMP network administrator Modbus TCP I/O Scanner and Messaging Ethernet/IP I/O Scanner and Messaging Embedded 4-port switch RSTP support Port mirroring
Port Ethernet	10BASE-T/100BASE-TX
Memory Usage	Application saving Activating the standard web server
Supply	Internal power supply via rack
Marking	CE
Local Signalling	for processor running (RUN) 1 LED (green) for processor or system fault (ERR) 1 LED (red) for status of Ethernet network (ETH STS) 1 LED (amber) for MS (Module Status) 1 LED (green/red) for NS (Network Status) 1 LED (green/red)
Control Type	Processor or system fault (ERR)
Current Consumption	555 mA 3.3 V DC
Module Format	Standard
Net Weight	0.44 lb(US) (0.2 kg)

Environment

Ambient Air Temperature For Operation	32…140 °F (0…60 °C)
Relative Humidity	10…95 % without condensation
Ip Degree Of Protection	IP20
Directives	2014/35/EU - low voltage directive 2014/30/EU - electromagnetic compatibility 2014/34/EU - ATEX directive

Price is “List Price” and may be subject to a trade discount – check with your local distributor or retailer for actual price.

Disclaimer: This documentation is not intended as a substitute for and is not to be used for determining suitability or reliability of these products for specific user applications

Product Certifications	CE UL CSA RCM EAC Merchant Navy ATEX zone 2/22 IECEx zone 2/22
Standards	EN/IEC 61131-2 EN/IEC 61010-2-201 UL 61010-2-201 CSA C22.2 No 61010-2-201 IACS E10 EN/IEC 61000-6-5, interface type 1 and type 2 EN/IEC 61850-3, location G EN/IEC 60079-0
Environmental Characteristic	Hazardous location class I division 2

Ordering and shipping details

Category	US1PC3418160
Discount Schedule	PC34
Gtin	3595864083575
Returnability	Yes
Country Of Origin	US

Packing Units

Unit Type Of Package 1	PCE
Number Of Units In Package 1	1
Package 1 Height	2.17 in (5.500 cm)
Package 1 Width	4.33 in (11.000 cm)
Package 1 Length	4.72 in (12.000 cm)
Package 1 Weight	7.72 oz (219.000 g)
Unit Type Of Package 2	S02
Number Of Units In Package 2	15
Package 2 Height	5.91 in (15.000 cm)
Package 2 Width	11.81 in (30.000 cm)
Package 2 Length	15.75 in (40.000 cm)
Package 2 Weight	8.06 lb(US) (3.656 kg)

Contractual warranty

Warranty	18 months

Sustainability

Green Premium™ label is Schneider Electric's commitment to delivering products with best-in-class environmental performance. Green Premium promises compliance with the latest regulations, transparency on environmental impacts, as well as circular and low-CO_2 products.

Guide to assessing product sustainability is a white paper that clarifies global eco-label standards and how to interpret environmental declarations.

Learn more about Green Premium >

Guide to assess a product's sustainability >

Transparency RoHS/REACh

Well-being performance

Mercury Free

Rohs Exemption Information	Yes

Certifications & Standards

Reach Regulation	REACh Declaration
Eu Rohs Directive	Pro-active compliance (Product out of EU RoHS legal scope)
China Rohs Regulation	China RoHS declaration
Environmental Disclosure	Product Environmental Profile
Weee	The product must be disposed on European Union markets following specific waste collection and never end up in rubbish bins.
Circularity Profile	End of Life Information
California Proposition 65	WARNING: This product can expose you to chemicals including: Lead and lead compounds, which is known to the State of California to cause cancer and birth defects or other reproductive harm. For more information go to www.P65Warnings.ca.gov

Dimensions Drawings

Modules Mounted on Racks

Dimensions

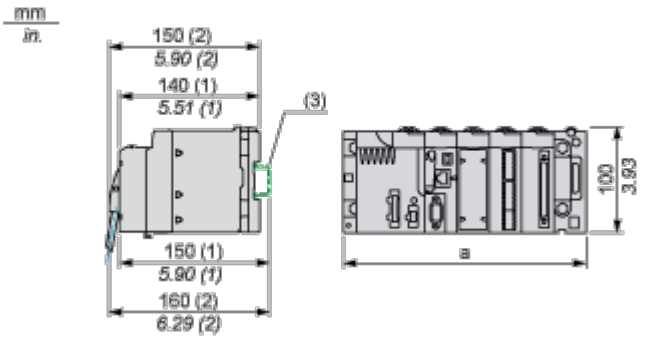

(1) With removable terminal block (cage, screw or spring).

(2) With FCN connector.

(3) On AM1 ED rail: 35 mm wide, 15 mm deep. Only possible with BMXXBP0400/0400H/0600/0600H/0800/0800H rack.

Rack references	a in mm	a in in.
BMXXBP0400 and BMXXBP0400H	242.4	09.54
BMXXBP0600 and BMXXBP0600H	307.6	12.11
BMXXBP0800 and BMXXBP0800H	372.8	14.68
BMXXBP1200 and BMXXBP1200H	503.2	19.81