Product data sheet

Specifications

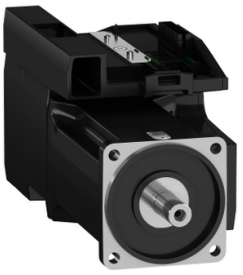

servo motor BMI 1-phase - untapped IP54 multiturn - 32768 p/t x 4096 t

BMI1002T07A

Product availability: Non-Stock - Not normally stocked in distribution facility

Price*: 2,986.48 USD

Main

Range Compatibility	Lexium 32i
Product Or Component Type	Servo motor with power stage
Device Short Name	BMI

Complementary

Maximum Mechanical Speed	6000 rpm
[Us] Rated Supply Voltage	115...230 V - 15...10 %
Supply Voltage Limits	100…240 V
Phase	Single phase
Supply Frequency	50/60 Hz - 5...5 %
Network Frequency Limits	47.5…63 Hz
Emc Filter	Integrated
Continuous Output Current	6 A 8 kHz
Output Current 3S Peak	18 A 230 V 3 s
Continuous Stall Current	6 A
Continuous Stall Torque	53.10 lbf.in (6 N.m) 115...230 V single phase
Peak Stall Torque	128.34 lbf.in (14.5 N.m) 115 V single phase 128.34 lbf.in (14.5 N.m) 230 V single phase
Nominal Output Power	750 W 115 V single phase 1300 W 230 V single phase
Nominal Torque	47.79 lbf.in (5.4 N.m) 115 V single phase 38.94 lbf.in (4.4 N.m) 230 V single phase
Nominal Speed	1400 rpm 115 V single phase 3000 rpm 230 V single phase
Maximum Current Irms	30 A 115 V, single phase 30 A 230 V, single phase
Product Compatibility	Drive control unit LXM32i CANopen Drive control unit LXM32i EtherCAT
Shaft End	Untapped
Second Shaft	Without second shaft end
Shaft Diameter	0.75 in (19 mm)
Shaft Length	1.57 in (40 mm)
Feedback Type	Absolute multiturn SinCos Hiperface

Price is “List Price” and may be subject to a trade discount – check with your local distributor or retailer for actual price.

Disclaimer: This documentation is not intended as a substitute for and is not to be used for determining suitability or reliability of these products for specific user applications

Speed Feedback Resolution	32768 points/turn x 4096 turns
Holding Brake	Without
Mounting Support	International standard flange
Motor Flange Size	3.94 in (100 mm)
Electrical Connection	Printed circuit board connector
Torque Constant	0.89 N.m/A 68 °F (20 °C)
Back Emf Constant	58.5 V/krpm 68 °F (20 °C)
Number Of Motor Poles	10
Rotor Inertia	6.28 kg.cm²
Stator Resistance	1.08 Ohm 68 °F (20 °C)
Stator Inductance	4.7 mH 68 °F (20 °C)
Stator Electrical Time Constant	4.35 ms 68 °F (20 °C)
Maximum Radial Force Fr	990 N 1000 rpm 790 N 2000 rpm 690 N 3000 rpm 620 N 4000 rpm 580 N 5000 rpm
Maximum Axial Force Fa	0.2 x Fr
Type Of Cooling	Natural convection
Length	10.75 in (273 mm)
Number Of Motor Stacks	2
Centring Collar Diameter	3.74 in (95 mm)
Centring Collar Depth	0.14 in (3.5 mm)
Number Of Mounting Holes	4
Mounting Holes Diameter	0.35 in (9 mm)
Circle Diameter Of The Mounting Holes	4.53 in (115 mm)
Distance Shaft Shoulder-Flange	0.14 in (3.5 mm)

Environment

Ip Degree Of Protection	Shaft IP54 Housing IP65

Ordering and shipping details

Category	US1PC5618287
Discount Schedule	PC56
Gtin	3606485377308
Returnability	No
Country Of Origin	DE

Packing Units

Unit Type Of Package 1	PCE
Number Of Units In Package 1	1
Package 1 Height	10.16 in (25.8 cm)
Package 1 Width	7.87 in (20.0 cm)

Package 1 Length	23.23 in (59.0 cm)
Package 1 Weight	20.94 lb(US) (9.5 kg)
Unit Type Of Package 2	P06
Number Of Units In Package 2	8
Package 2 Height	30.31 in (77.0 cm)
Package 2 Width	31.50 in (80.0 cm)
Package 2 Length	23.62 in (60.0 cm)
Package 2 Weight	186.29 lb(US) (84.5 kg)

Contractual warranty

Warranty	18 months

Sustainability

Green Premium™ label is Schneider Electric's commitment to delivering products with best-in-class environmental performance. Green Premium promises compliance with the latest regulations, transparency on environmental impacts, as well as circular and low-CO_2 products.

Guide to assessing product sustainability is a white paper that clarifies global eco-label standards and how to interpret environmental declarations.

Learn more about Green Premium >

Guide to assess a product's sustainability >

Transparency RoHS/REACh

Well-being performance

Mercury Free	
Rohs Exemption Information	Yes
Pvc Free	

Certifications & Standards

Reach Regulation	REACh Declaration
Eu Rohs Directive	Pro-active compliance (Product out of EU RoHS legal scope)
China Rohs Regulation	China RoHS declaration
Environmental Disclosure	Product Environmental Profile
Weee	The product must be disposed on European Union markets following specific waste collection and never end up in rubbish bins.
Circularity Profile	End of Life Information
California Proposition 65	WARNING: This product can expose you to chemicals including: Lead and lead compounds, which is known to the State of California to cause cancer and birth defects or other reproductive harm. For more information go to www.P65Warnings.ca.gov

Dimensions Drawings

External Dimensions

With Standard Braking Resistor

Mounting type A

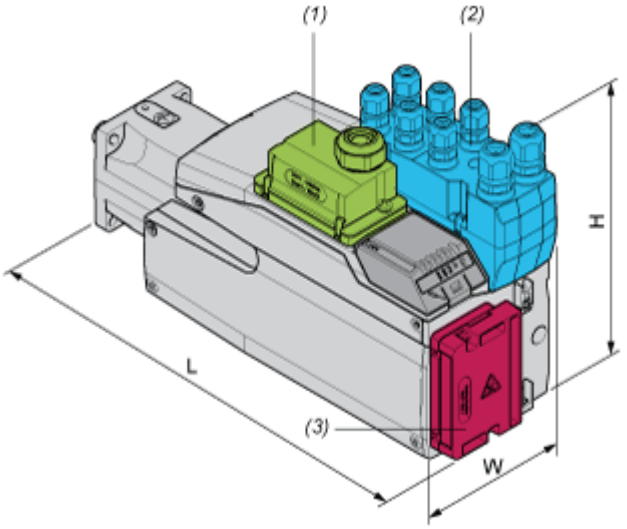

(1) Module for supply voltage

(2) I/O module

(3) Standard braking resistor

Dimensions in mm

W	H	L
132,6	217	294

Dimensions in in.

W	H	L
5,22	8,54	11,57

Mounting type B

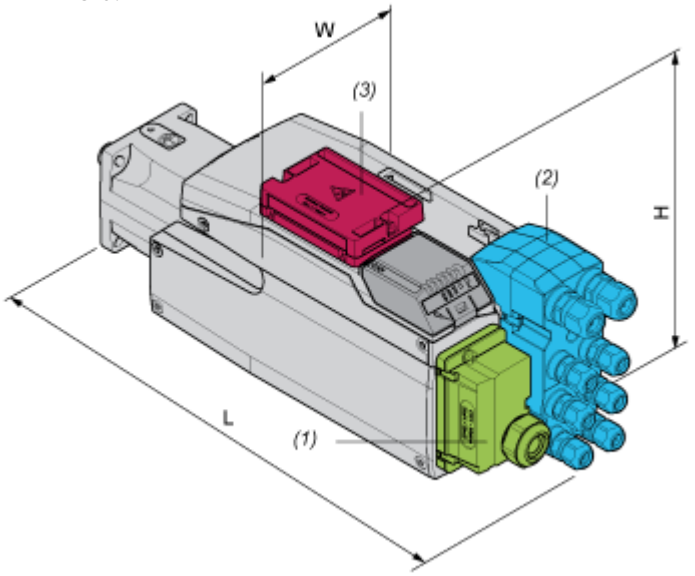

(1) Module for supply voltage

(2) I/O module

(3) Standard braking resistor

Dimensions in mm

W	H	L
132,6	168	343

Dimensions in in.

W	H	L
5,22	6,61	13,5

With External Braking Resistor

Mounting type C

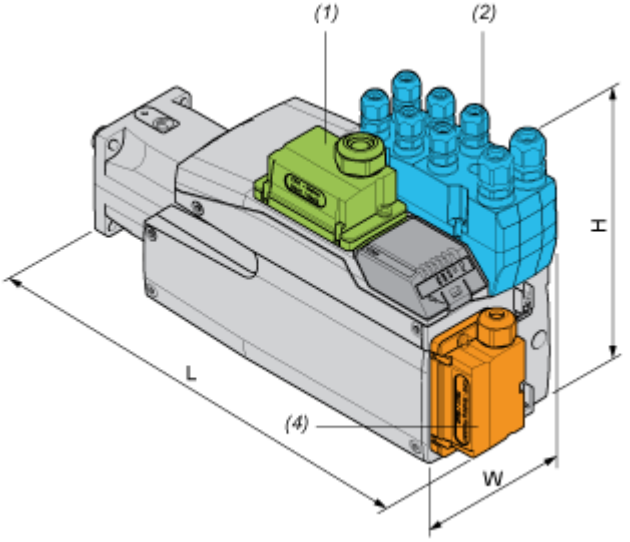

(1) Module for supply voltage

(2) I/O module

(4) External braking resistor

Dimensions in mm

W	H	L
132,6	217	306

Dimensions in in.

W	H	L
5,22	8,54	12,05

Mounting type D

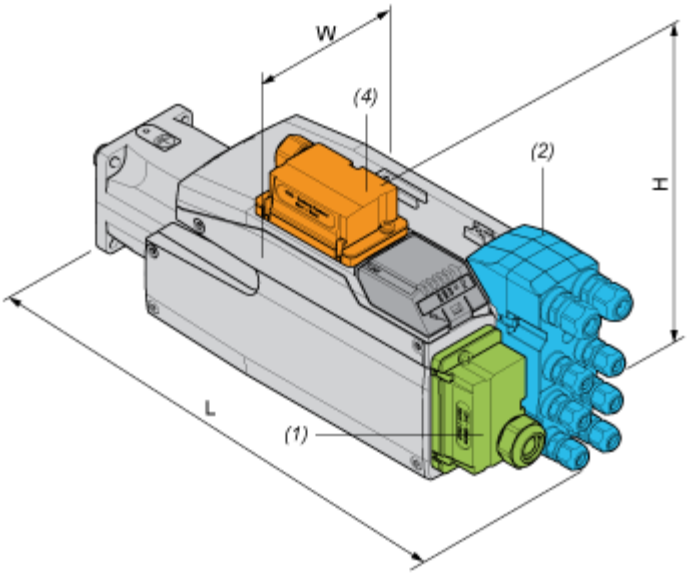

(1) Module for supply voltage

(2) I/O module

(4) External braking resistor

Dimensions in mm

W	H	L
132,6	180	343

Dimensions in in.

W	H	L
5,22	7,09	13,5

Mounting type E

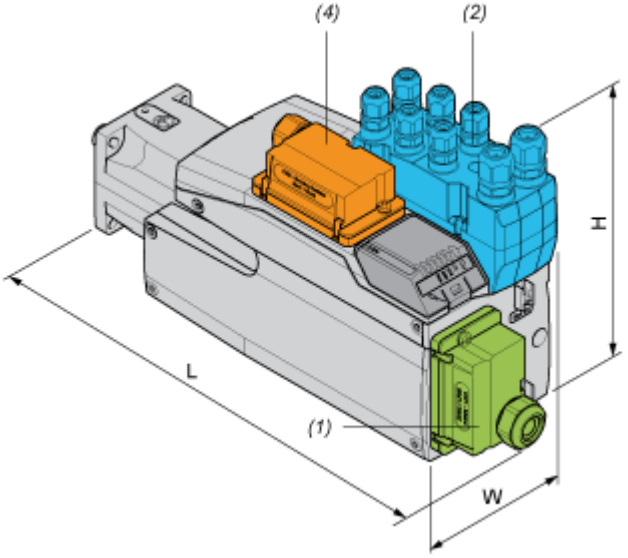

(1) Module for supply voltage

(2) I/O module

(4) External braking resistor

Dimensions in mm

W	H	L
132,6	217	333

Dimensions in in.

W	H	L
5,22	8,54	13,11

Mounting type F

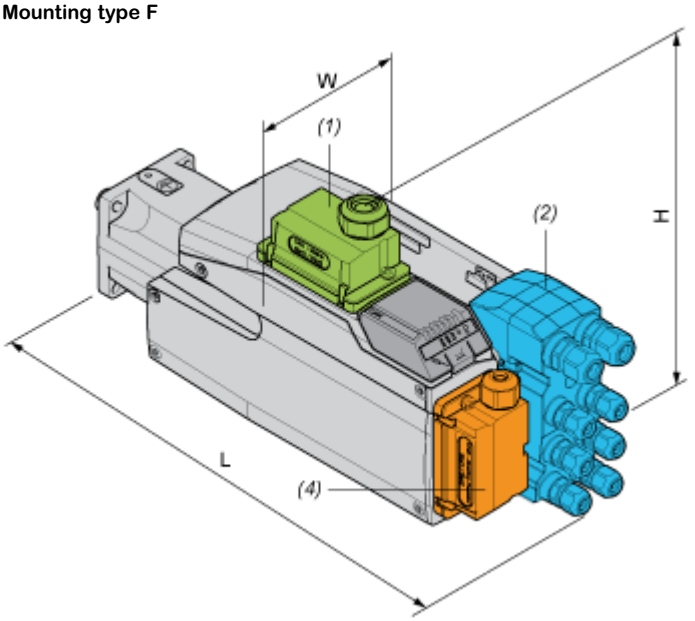

(1) Module for supply voltage

(2) I/O module

(4) External braking resistor

Dimensions in mm

W	H	L
132,6	206,5	343

Dimensions in in.

W	H	L
5,22	8,13	13,5

Performance Curves

Performance Curves

Torque/Speed Curves with 115 V Single Phase Supply Voltage

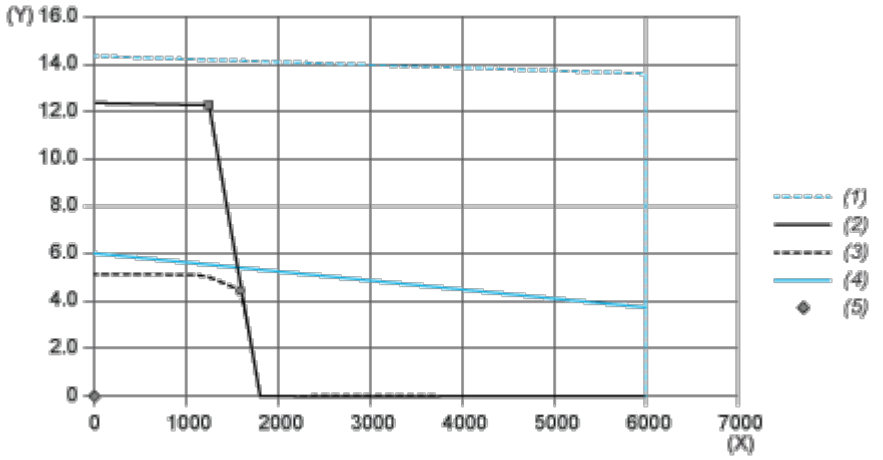

(X) Speed (rpm)

(Y) Torque (N.m)

(1) Motor peak

(2) Drive peak

(3) Drive cont

(4) Motor cont

(5) Operating point

		Power	At Speed	With Torque
max. Peak Power	■	1721 W	1380 rpm	11.91 N.m
max Cont. Power (Drive)	●	757 W	1620 rpm	4.46 N.m

Performance Curves

Torque/Speed Curves with 230 V Single Phase Supply Voltage

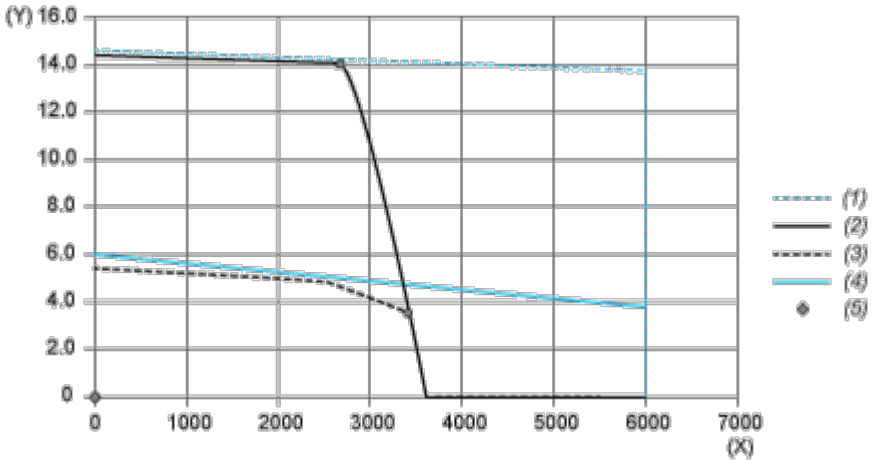

(X) Speed (rpm)

(Y) Torque (N.m)

(1) Motor peak

(2) Drive peak

(3) Drive cont

(4) Motor cont

(5) Operating point

		Power	At Speed	With Torque
max. Peak Power	■	4069 W	2760 rpm	14.08 N.m
max Cont. Power (Drive)	●	1257 W	3420 rpm	3.51 N.m