Product data sheet

Specifications

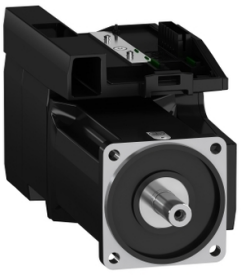

servo motor BMI 3-phase - keyed IP54 single turn - 32768 p/t

BMI1002P16A

Product availability: Non-Stock - Not normally stocked in distribution facility

Price*: 1,891.42 USD

Main

Range Compatibility	Lexium 32i
Product Or Component Type	Servo motor with power stage
Device Short Name	BMI

Complementary

Maximum Mechanical Speed	6000 rpm
[Us] Rated Supply Voltage	208...480 V - 15...10 %
Supply Voltage Limits	208…480 V
Phase	Three phase
Supply Frequency	50/60 Hz - 5...5 %
Network Frequency Limits	47.5…63 Hz
Emc Filter	Integrated
Continuous Output Current	4 A 8 kHz
Output Current 3S Peak	12 A 400 V 3 s
Continuous Stall Current	4 A
Continuous Stall Torque	53.10 lbf.in (6 N.m) 208...480 V three phase
Peak Stall Torque	123.91 lbf.in (14 N.m) 208 V three phase 123.91 lbf.in (14 N.m) 400 V three phase 123.91 lbf.in (14 N.m) 480 V three phase
Nominal Output Power	1000 W 208 V three phase 1900 W 400 V three phase 1900 W 480 V three phase
Nominal Torque	45.14 lbf.in (5.1 N.m) 400 V three phase 47.79 lbf.in (5.4 N.m) 208 V three phase 36.29 lbf.in (4.1 N.m) 480 V three phase
Nominal Speed	1900 rpm 208 V three phase 3800 rpm 400 V three phase 4700 rpm 480 V three phase
Maximum Current Irms	17.5 A 208 V, three phase 17.5 A 400 V, three phase 17.5 A 480 V, three phase
Product Compatibility	Drive control unit LXM32i CANopen Drive control unit LXM32i EtherCAT
Shaft End	Keyed
Second Shaft	Without second shaft end
Shaft Diameter	0.75 in (19 mm)

Price is “List Price” and may be subject to a trade discount – check with your local distributor or retailer for actual price.

Disclaimer: This documentation is not intended as a substitute for and is not to be used for determining suitability or reliability of these products for specific user applications

Shaft Length	1.57 in (40 mm)
Key Width	0.24 in (6 mm)
Feedback Type	Absolute single turn SinCos Hiperface
Speed Feedback Resolution	32768 points/turn
Holding Brake	Without
Mounting Support	International standard flange
Motor Flange Size	3.94 in (100 mm)
Electrical Connection	Printed circuit board connector
Torque Constant	1.28 N.m/A 68 °F (20 °C)
Back Emf Constant	84.52 V/krpm 68 °F (20 °C)
Number Of Motor Poles	10
Rotor Inertia	6.28 kg.cm²
Stator Resistance	2.347 Ohm 68 °F (20 °C)
Stator Inductance	9.79 mH 68 °F (20 °C)
Stator Electrical Time Constant	4.17 ms 68 °F (20 °C)
Maximum Radial Force Fr	990 N 1000 rpm 790 N 2000 rpm 690 N 3000 rpm 620 N 4000 rpm 580 N 5000 rpm
Maximum Axial Force Fa	0.2 x Fr
Type Of Cooling	Natural convection
Length	10.75 in (273 mm)
Number Of Motor Stacks	2
Centring Collar Diameter	3.74 in (95 mm)
Centring Collar Depth	0.14 in (3.5 mm)
Number Of Mounting Holes	4
Mounting Holes Diameter	0.35 in (9 mm)
Circle Diameter Of The Mounting Holes	4.53 in (115 mm)
Distance Shaft Shoulder-Flange	0.14 in (3.5 mm)

Environment

Ip Degree Of Protection	Shaft IP54 Housing IP65

Ordering and shipping details

Category	US1PC5618287
Discount Schedule	PC56
Gtin	3606485377049
Returnability	No
Country Of Origin	DE

Packing Units

Unit Type Of Package 1	PCE

Number Of Units In Package 1	1
Package 1 Height	10.63 in (27.000 cm)
Package 1 Width	7.95 in (20.200 cm)
Package 1 Length	23.39 in (59.400 cm)
Package 1 Weight	20.94 lb(US) (9.500 kg)
Unit Type Of Package 2	P06
Number Of Units In Package 2	5
Package 2 Height	31.50 in (80.000 cm)
Package 2 Width	30.31 in (77.000 cm)
Package 2 Length	23.62 in (60.000 cm)
Package 2 Weight	117.95 lb(US) (53.500 kg)

Contractual warranty

Warranty	18 months

Sustainability

Green Premium™ label is Schneider Electric's commitment to delivering products with best-in-class environmental performance. Green Premium promises compliance with the latest regulations, transparency on environmental impacts, as well as circular and low-CO_2 products.

Guide to assessing product sustainability is a white paper that clarifies global eco-label standards and how to interpret environmental declarations.

Learn more about Green Premium >

Guide to assess a product's sustainability >

Transparency RoHS/REACh

Well-being performance

Mercury Free	
Rohs Exemption Information	Yes
Pvc Free	

Certifications & Standards

Reach Regulation	REACh Declaration
Eu Rohs Directive	Pro-active compliance (Product out of EU RoHS legal scope)
China Rohs Regulation	China RoHS declaration
Environmental Disclosure	Product Environmental Profile
Weee	The product must be disposed on European Union markets following specific waste collection and never end up in rubbish bins.
Circularity Profile	End of Life Information
California Proposition 65	WARNING: This product can expose you to chemicals including: Lead and lead compounds, which is known to the State of California to cause cancer and birth defects or other reproductive harm. For more information go to www.P65Warnings.ca.gov

Dimensions Drawings

External Dimensions

With Standard Braking Resistor

Mounting type A

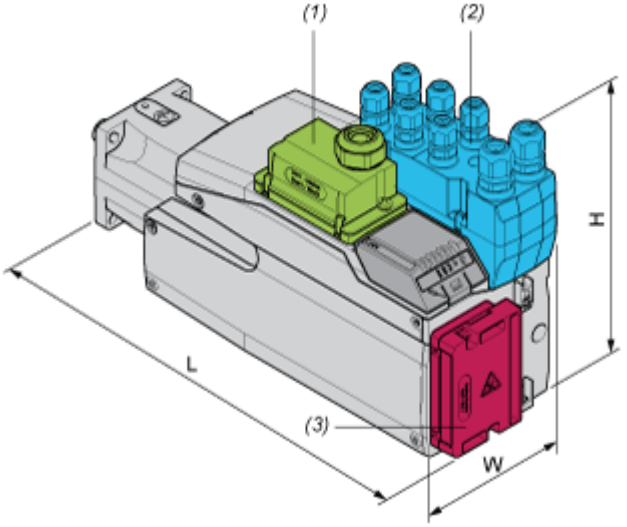

(1) Module for supply voltage

(2) I/O module

(3) Standard braking resistor

Dimensions in mm

W	H	L
132,6	217	294

Dimensions in in.

W	H	L
5,22	8,54	11,57

Mounting type B

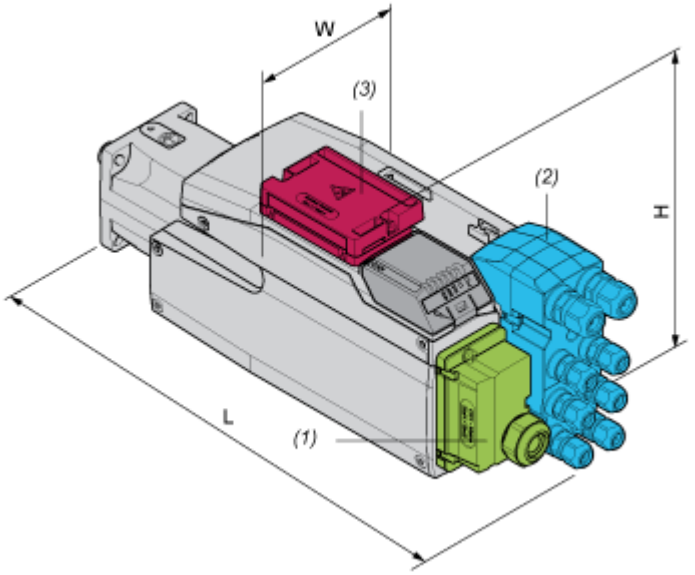

(1) Module for supply voltage

(2) I/O module

(3) Standard braking resistor

Dimensions in mm

W	H	L
132,6	168	343

Dimensions in in.

W	H	L
5,22	6,61	13,5

With External Braking Resistor

Mounting type C

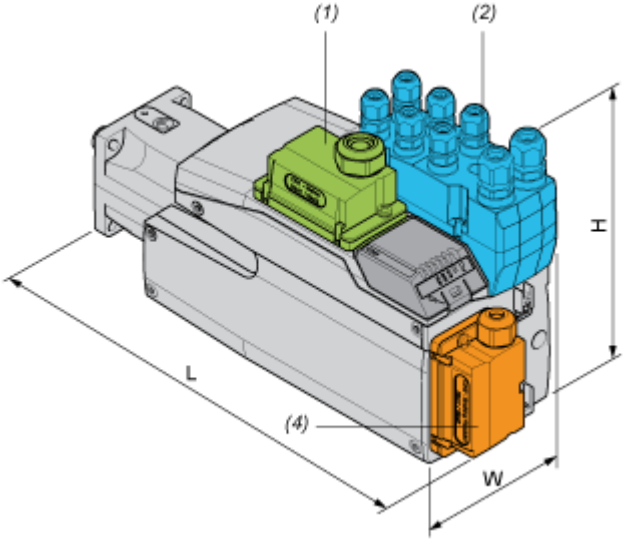

(1) Module for supply voltage

(2) I/O module

(4) External braking resistor

Dimensions in mm

W	H	L
132,6	217	306

Dimensions in in.

W	H	L
5,22	8,54	12,05

Mounting type D

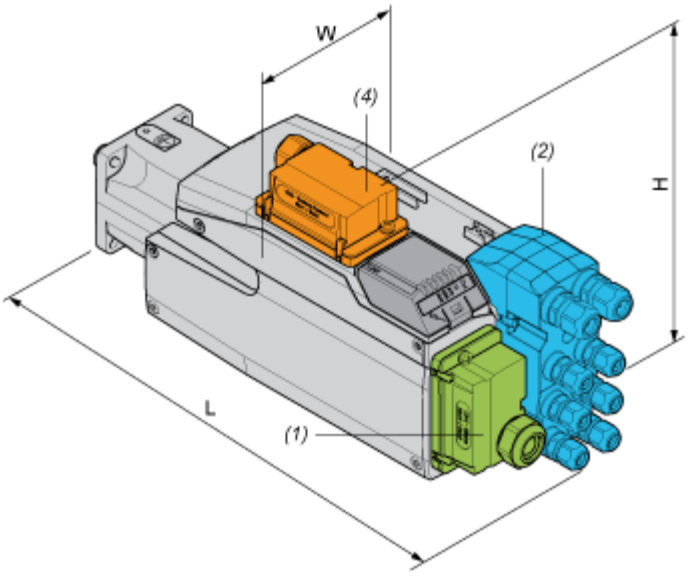

(1) Module for supply voltage

(2) I/O module

(4) External braking resistor

Dimensions in mm

W	H	L
132,6	180	343

Dimensions in in.

W	H	L
5,22	7,09	13,5

Mounting type E

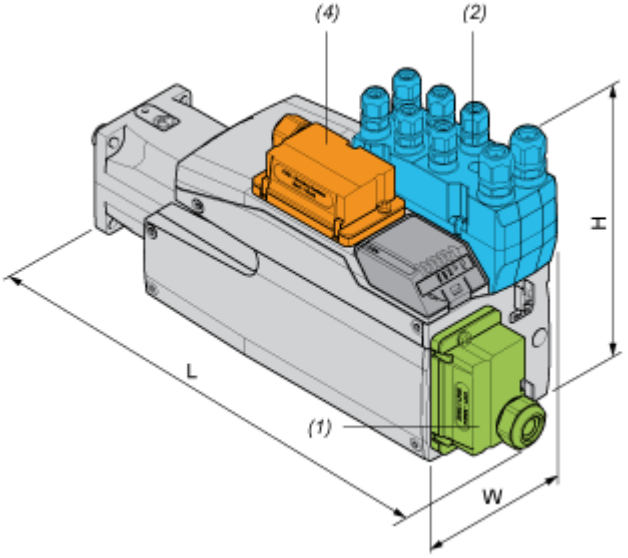

(1) Module for supply voltage

(2) I/O module

(4) External braking resistor

Dimensions in mm

W	H	L
132,6	217	333

Dimensions in in.

W	H	L
5,22	8,54	13,11

Mounting type F

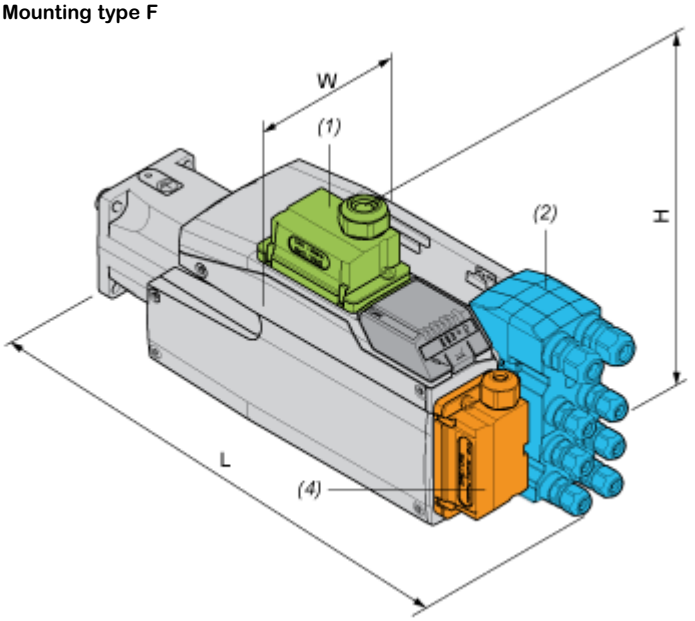

(1) Module for supply voltage

(2) I/O module

(4) External braking resistor

Dimensions in mm

W	H	L
132,6	206,5	343

Dimensions in in.

W	H	L
5,22	8,13	13,5

Performance Curves

Performance Curves

Torque/Speed Curves with 208 V Three Phases Supply Voltage

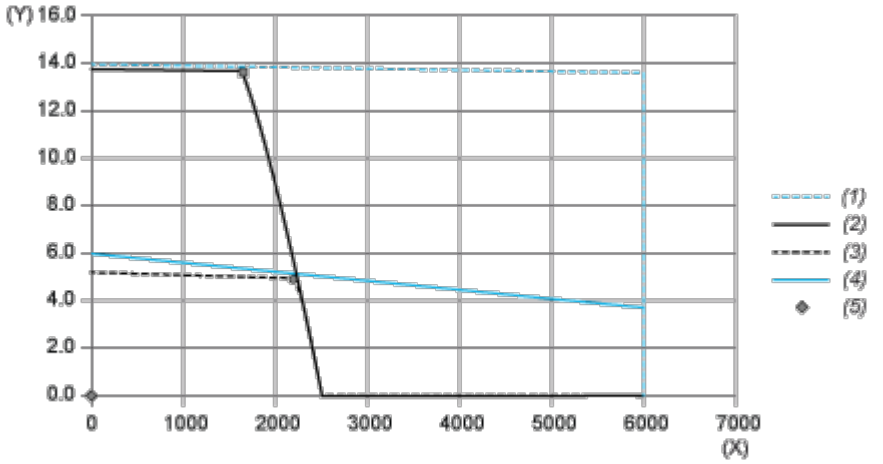

(X) Speed (rpm)

(Y) Torque (N.m)

(1) Motor peak

(2) Drive peak

(3) Drive cont

(4) Motor cont

(5) Operating point

		Power	At Speed	With Torque
max. Peak Power	■	2499 W	1740 rpm	13.72 N.m
max Cont. Power (Drive)	●	1109	2160 rpm	4.90 N.m

Performance Curves

Torque/Speed Curves with 400 V Three Phases Supply Voltage

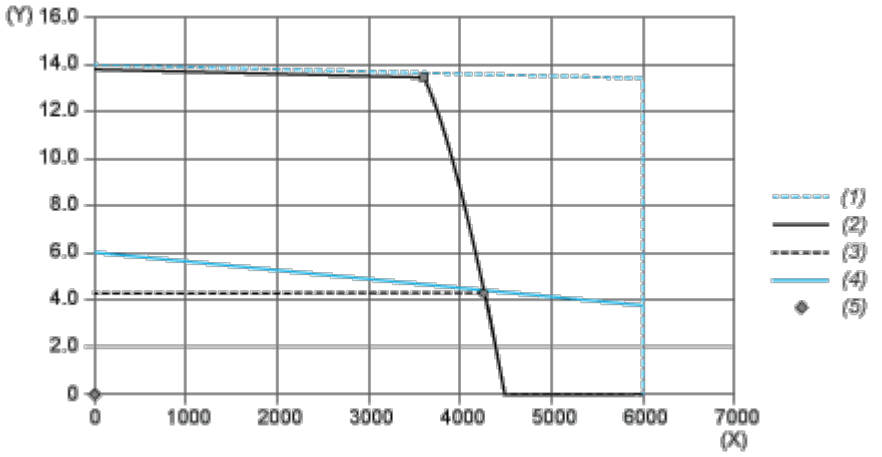

(X) Speed (rpm)

(Y) Torque (N.m)

(1) Motor peak

(2) Drive peak

(3) Drive cont

(4) Motor cont

(5) Operating point

		Power	At Speed	With Torque
max. Peak Power	■	5090 W	3600 rpm	13.50 N.m
max Cont. Power (Drive)	●	1954 W	4320 rpm	4.32 N.m

Performance Curves

Torque/Speed Curves with 480 V Three Phases Supply Voltage

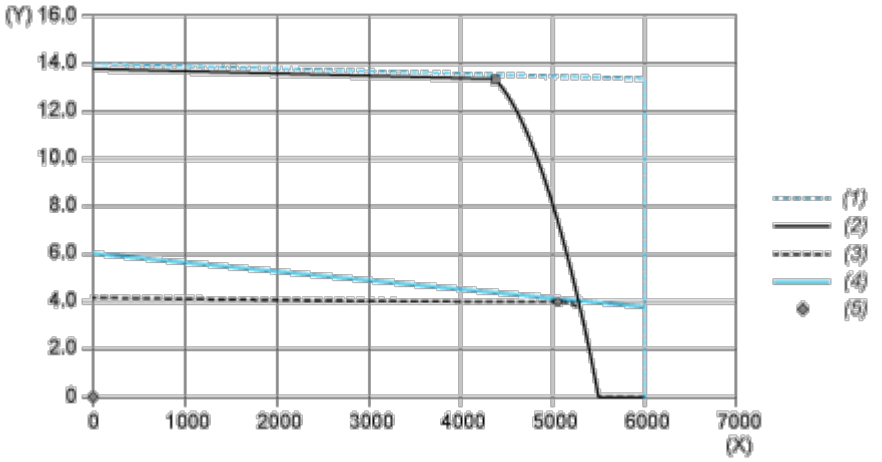

(X) Speed (rpm)

(Y) Torque (N.m)

(1) Motor peak

(2) Drive peak

(3) Drive cont

(4) Motor cont

(5) Operating point

		Power	At Speed	With Torque
max. Peak Power	■	6117 W	4380 rpm	13.34 N.m
max Cont. Power (Drive)	●	2080 W	5040 rpm	3.94 N.m